MPower®

Digital Switching Platform

Scan QR code to watch the
MPower Product Video

Seamless integration of Maretron products, third-party sensors, multifunction displays, and instrumentation for the ultimate vessel monitoring and control

---

Maretron®

Vessel Monitoring & Control

Basic MPower System Connected to NMEA 2000® Network

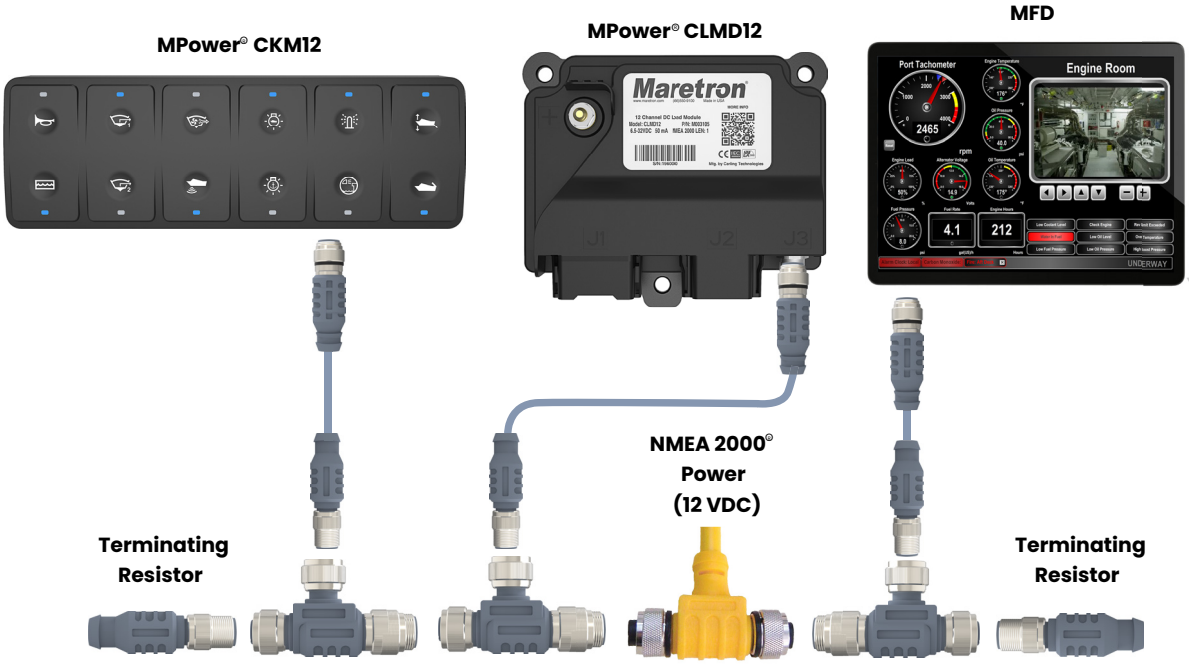

The MPower Advantage

All Maretron products are NMEA certified* and connect directly to the NMEA 2000 network ('N2K backbone'), providing **access to and compatibility** with an array of **Maretron and 3rd party sensors, multifunction displays and instrumentation.**
This commitment to using **standard NMEA PGNs** (Parameter Group Numbers) is a **compelling advantage** of the new Maretron **MPower® products**. Designed to be scalable from small runabout vessels to large yachts, MPower makes it easy to **expand or replace** your existing systems and **future-proof your vessel** without headache. Whether used as a **whole distributed power control and vessel monitoring system**, or applied to resolve a **single electrical obstacle**, MPower creates superior electrical design versatility and delivers easy, intuitive control over the increasingly complex systems found on today's vessels.

Because MPower **integrates** with a wide variety of **digital and analog** devices, a vessel's complete digital switching system with **MPower as the center of control** can include a combination of:

- Maretron and 3rd party multifunction displays or web servers that support standard PGN messages
- Maretron customizable keypads or digital switch modules
- MPower DC load controller modules
- MPower DC load bypass module
- OctoPlex® AC power distribution system
- Various wireless key fobs or security input devices
- Maretron and 3rd party tank level, smoke detection or alarm devices
- Carling and 3rd party interior, exterior, proximity, limit, float, rain, or water detection switches
- Maretron J1939 to NMEA 2000 Gateway and more

ALL MARETRON PRODUCTS ARE NMEA 2000® CERTIFIED* and have been tested and verified to meet specific critical safety criteria and to correctly implement network management and messaging. Certification involves a suite of more than 100 tests that a product must pass, including but not limited to: Priority Messaging (so the highest priority message always gets through; Auto Addressing (plug and unplug products without network interference); Product Information (understanding of products on the network); EMI and Noise Immunity Requirements; Electrical Isolation (assures that products do not disrupt the network).

* When manufacturers list products as NMEA 2000 'compatible' or 'compliant', the product has not been tested and probably does not meet the stringent SAFETY requirements designed into the NMEA 2000 specification. Without the testing and verification, there is no guarantee that the products will work in harmony and be safe.

Ask your NMEA dealer for Only NMEA 2000 Certified products and NMEA 2000 approved cables and connectors to ensure the highest level of reliability, interconnection, forward compatibility, and SAFETY!

NMEA 2000® Certified products are listed on the NMEA website **www.NMEA.org.**

MPower®

Digital Switching Platform

Simple. Intuitive. Expandable. Future-proof.

☑ Add 'Modes' to your Vessel

Modes can be any combination of desired items to turn On or Off with the touch of one button. Think of Modes as saved presets of the circuits on your vessel. You may want a 'Go Fishing', 'Anchored', 'Day Cruise', 'Night Fishing' or 'Night Cruise' Mode.

☑ Add a Second Helm

Easily add second helm electrical control by utilizing digital switching on a display or Maretron digital keypad or switch bank by connecting to the vessel's NMEA 2000 Bus.

☑ Elimination of Various 3rd Party Controllers

Use MPower CLMD12 or CLMD16 to configure generator start sequences, windshield wiper controls, light dimming control and more, eliminating the need of additional controllers to be cut into your helm or installed in your vessel. Most of the time, elimination of otherwise expensive 3rd party controllers can vastly offset and sometimes negative offset the cost of an MPower device making MPower a clear choice, saving you money.

☑ Generator Start Sequencing

Imagine remote one-button control to start your generator. Use MPower CLMD12 or CLMD16 to configure three outputs to behave as needed. Possibly one output is generator Ignition / On, another is for fuel priming and block preheating and the last circuit is used for the crank signal.

☑ Windshield Wiper Controller

Eliminate unsightly windshield wiper control switches and let MPower CLMD12 or CLMD16 switch the appropriate signals to drive and park your windshield wipers. Configure a rain sensor and engine ignition input to add automated wipers to your vessel.

☑ Livewell Controller (Never have dead bait again!)

Maybe you have a livewell that contains various devices connected to it such as a fill pump, circulation pump, aerator, and pump-out pump. Using MPower CLMD16, configure your livewell switch to activate a timed fill, turn on the aerator and circulation pump, and periodically turn on both fill and pump-out pump to replace the water.

☑ Control Trim Tabs with MPower CLMD16

Connect traditional two-wire trim tab actuators directly to CLMD16 polarity reversing (H-Bridge) channels eliminating the need for an additional control panel and making Trim Tab control via MFD (multifunction display) possible.

☑ Moving Parts Automation

Using a combination of Inputs and Outputs on an MPower CLMD12 or CLMD16, sequential moving parts automation can be done. Imagine pressing a single button to control a complex slide-out control. Having proximity or limit switches connected to CLMD12 or CLMD16 to trigger the next sequential event in which the outputs are driven.

☑ Battery Management Automation

Use MPower CLMD16 voltage sensing inputs to trigger remote connection and disconnection of battery banks based on user configurable voltage values. Use CLMD16 load shedding feature for further protection from possible battery depletion.

☑ Equipment Saver

Turn off pumps based on tank level data with MPower CLMD16 or Maretron's N2KView®. Turn off the freshwater pump when the freshwater tank is empty, eliminating the possibility of damaging your pump by running it dry. Turn off head / toilet system and send an NMEA 2000® alert when your waste tank is full, eliminating the possibility of a vessel damaging overflow.

12-Channel DC Load Controller Module

MPower®

Designed for vessels of all sizes with smaller loads, the MPower® CLMD12 is a compact 12-Channel DC Load Controller Module. Two of the 12 breakers handle a maximum of 12 amps, six handle a maximum of 10 amps and four handle a maximum of 5 amps with a total current capacity of 75 amps. Additionally, like circuits can be paralleled.

If a smaller circuit needs to be protected, each of the 12 breakers can be set to trip at lower current levels using the new Maretron N2KAnalyzer® V3 software. In addition, the CLMD12 has inputs for up to 7 hard-wired switches that can be used to switch breaker states, or as inputs for other data such as bilge alarms or hatch positions, etc.

The CLMD12 handles many DC load types such as lights, pumps, motors, and electronics. An added benefit of the CLMD12 is that it reports the current through each of the 12 breakers. This allows you to determine if loads are drawing too much or too little electrical current. This information can be used to report over-current faults and undercurrent conditions.

For manual control of the loads, an MPower 12-Channel Bypass Module (CBMD12) can be installed in conjunction with the CLMD12.

Monitor and control onboard electrical and electronic systems and reset circuits onboard and remotely with the following devices:

- Any 3rd party MFD that supports standard digital switching PGNs
- Maretron MBB300C Black Box
  - Garmin OneHelm™
  - Raymarine LightHouse 3
- Maretron TSM Series Dedicated Touchscreen
- MPower VMM6 Digital Switch Module
- MPower CKM12 Keypad
- Any device running Maretron's award-winning N2KView® V3 Software

Product Features

- NMEA 2000® Interface
- IP67 Rated
- Ignition Protected
- Opto-isolated from NMEA 2000, eliminating potential ground loops
- 12 dimmable (PWM) Electronic Circuit Breakers (ECBs) for ON/OFF control over NMEA 2000 network
  - 2 breakers capable of carrying up to 12 amps
  - 6 breakers capable of carrying up to 10 amps
  - 4 breakers capable of carrying up to 5 amps
- Individual breaker electrical current monitoring
- Breakers can have power-up states defined (ON, OFF, or LAST STATE)
- Breakers can be locked against inadvertent actuation
- 7 discrete inputs configurable as Active High, Active Low
- Automatic ECB overcurrent shutdown
- Automatic ECB thermal shutdown (overtemperature protection)

PRODUCTS

PART NUMBER	DESCRIPTION
CLMD12-R	12-Channel DC Load Controller Module w/A3706 and A3707
CLMD12	12-Channel DC Load Controller Module
A3706	Output (J1) Mating Connector with 0.3m Flying Leads
A3707	Input (J2) Mating Connector with 0.3m Flying Leads

PART NUMBER	DESCRIPTION
DT06-12SA	J1 (Output) Mating Connector, Deutsch
0462-209-16141	J1 (Output) 14AWG Socket, Deutsch
W12S	J1 (Output) Wedge, Deutsch
1028-043-1205	J1 Back Shell, 12 Way Plug, Deutsch
DT06-08SA-E003	J2 (Input) Mating Connector, Deutsch
0462-201-16141	J2 (Input) 16-20AWG Socket, Deutsch
W8S	J2 (Input) Wedge, Deutsch
1011-243-0805	J2 Back Shell, 8 Way Plug, Deutsch

Dimensional Specifications - Inch [mm]

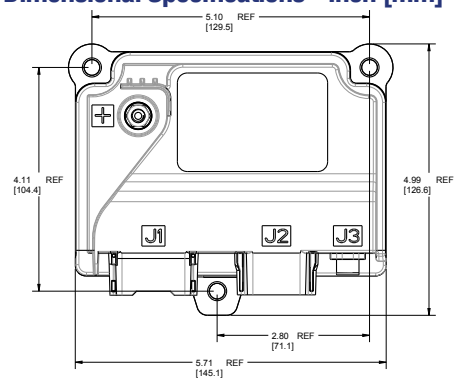

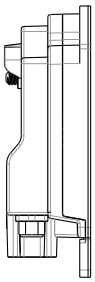

NOTES:

1. WEIGHT: 1.25 LBS. (0.567 KG.) MAX.
2. TEMPERATURE: OPERATING -40° C TO 55° C.
   STORAGE -55° C TO 85° C.
3. MATING CONNECTIONS:
   J1 - DEUTSCH P/N DT06-12SA
   J2 - DEUTSCH P/N DT06-08SA-E003
   J3 - MICRO-C MALE CONNECTOR, M12 X 1

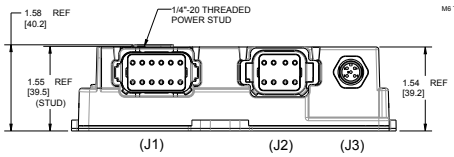

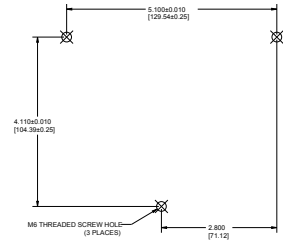

SPECIFICATIONS

PARAMETER	VALUE
Number of Channels	12
Switching Voltage	< 32 VDC
Maximum Unit Current Capacity	75 amps
Maximum Channel Current Ratings	4x5A, 6x10A, 2x12A

CERTIFICATIONS

PARAMETER	COMMENT
NMEA 2000	Certified
CE Mark	Recreational Craft Directive 2014/35/EU

NMEA 2000® PARAMETER GROUP NUMBERS (PGNs)

DESCRIPTION	PGN#	PGN NAME	DEFAULT RATE
Periodic Data PGNs	65300	Carling Proprietary	1 time / 4 seconds
	127500	Load Controller Connection State & Control	1 time / 4 seconds and on switch change
	127501	Binary Switch Bank Status	1 time / 15 seconds and on switch change
	127751	DC Voltage / Current	1 time / 15 seconds
Response to Requested PGNs	126464	PGN List (Transmit and Receive)	N/A
	126996	Product Information	N/A
	126998	Configuration Information	N/A
	130818	Maretron Proprietary	N/A
	130825	Maretron Proprietary	N/A
	130921	Carling Proprietary	N/A
Protocol PGNs	059392	ISO Acknowledge	N/A
	059904	ISO Request	N/A
	060928	ISO Address Claim	N/A
	126208	NMEA Request/Command/Acknowledge	N/A
	126993	Heartbeat	1 time / 60 seconds
	130060	Label	N/A

ELECTRICAL

PARAMETER	VALUE	COMMENT
Voltage Input Range	6.5 to 32 VDC	DC Voltage
Power Consumption	150mA @ 12 VDC / 70 mA @ 24 VDC	NMEA 2000 Interface
Load Equivalence Number (LEN)	3	NMEA 2000 Spec. (1LEN = 50 mA)
Reverse Battery Protection	Yes	Indefinitely
Load Dump Protection	Yes	Energy Rated per SAE J1113
Channel Current Measurement Accuracy	+/- 0.5 amps	Typical
Channel Current Measurement Resolution	0.1amps	
Minimum Channel Current Measurement	0.5 amps	
PWM (all breakers)		
Frequency	200 Hz	
Load	Inductive load interface not recommended when PWM used	
Duty Cycle Range	5% - 100%	
Duty Cycle Resolution	1%	
Programmable Trip Level Resolution	1 amp	
Discrete Input Channels		
Input Resistance	1KΩ	
Input Voltage, Open Circuit	2.75 V	
Low Voltage Threshold	0 to 1.02 V	
Open Voltage Threshold	1.51 – 4.31 V	
High Voltage Threshold	4.82 – 32.0 V	

MECHANICAL

PARAMETER	VALUE	COMMENT
Size	5.7" x 5.0" x 1.6" (144.8mm x 127mm x 40.6mm)	Including Flanges for Mounting
Weight	1.32 lb. (.599 kg)	
Power Stud Torque Value	20in-lbs. (2.26 N.m)	

12-Channel Bypass Module

MPower®

Installing the MPower® Bypass Module (CBMD12) in conjunction with the MPower 12-Channel DC Load Controller Module (CLMD12) provides owners/operators with the ability to manually control individual loads locally with a simple flip of a switch. The CBMD12 utilizes standard fuses for overcurrent protection and 12 Carling Curvette® Marine Rocker Switches for manual control of each load. One of the most popular styles used in general electrical applications, Curvette Rocker Switches are designed for extreme environments, corrosion, temperature, vibration, shock, and more. Extremely robust, Curvette switches are designed to last a minimum of 100,000 actuation cycles. This is a more reliable, safer and simpler process than physically moving a fuse while manually overriding a circuit.

It's important to ensure that the current rating of the fuse for each load is appropriate to protect the load and the wiring for that load. Please note that the Bypass Module does not support paralleled outputs since each circuit is controlled by a separate switch. Additionally, the Bypass Module does not support dimming of circuits.

Product Features

- 75 amps maximum current capacity
- Outputs
  - 12A max (two outputs)
  - 10A max (six outputs)
  - 5A max (four outputs)
- 12 & 24V DC power systems
- Carling Technologies Curvette® Rocker Switches
- Overcurrent protection via ATC standard fuses

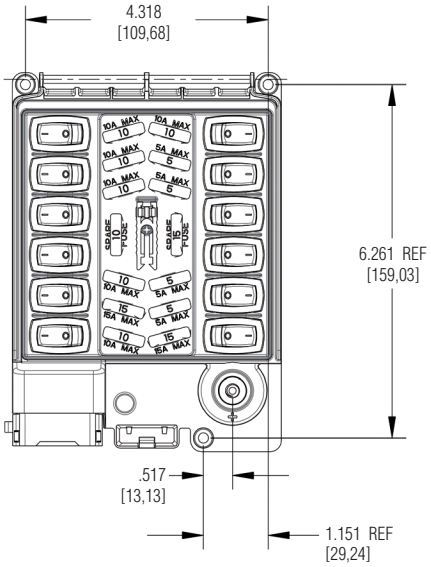

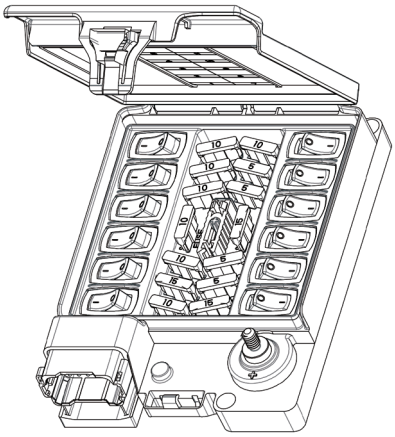

PRODUCT

PART NUMBER	DESCRIPTION
CBMD12-R	12-Channel Bypass Module w/ Fuse Pack and Jumper Wire
CBMD12	12-Channel Bypass Module
A3720	Bypass Module Jumper Wire with Lugs, 6AWG, Red
A3721	Bypass Module Fuse Pack (2 qty 15A, 6 qty 10A and 4 qty 5A)

Dimensional Specifications - Inch [mm]

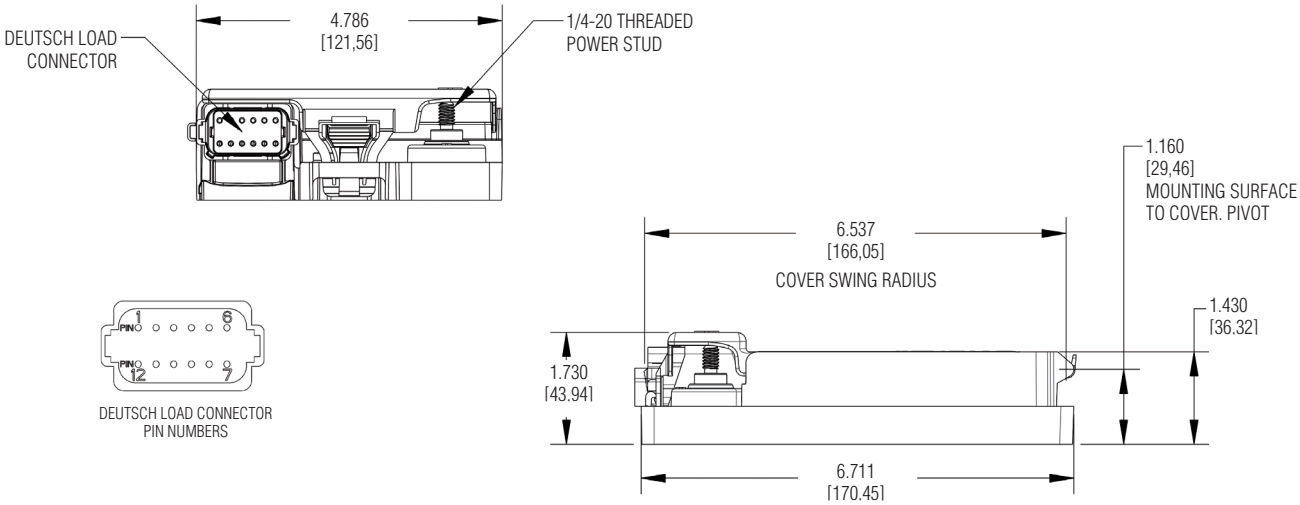

PIN#	1	2	3	4	5	6	7	8	9	10	11	12
SWITCH#	1	2	3	4	5	6	12	11	10	9	8	7
CIRCUIT#	5	4	8	2	10	1	11	3	12	6	9	7
FUSE MAX RATING	10 AMP	12 AMP	10 AMP	10 AMP	10 AMP	10 AMP	10 AMP	5 AMP	5 AMP	5 AMP	5 AMP	12 AMP

12-Channel Bypass Module and 12-Channel DC Load Controller Module Installation

For manual control of the loads, an MPower 12-Channel Bypass Module (CBMD12) can be installed in conjunction with the 12-Channel DC Load Controller Module (CLMD12).

16-Channel DC Load Controller Module

For larger loads and more circuits, the MPower® CLMD16 is a 16-Channel DC Load Controller Module. Four of the 16 breakers handle a maximum of 25 amps and twelve breakers handle a maximum of 12 amps with a total current capacity of 125 amps. Additionally, circuits can be paralleled.

The CLMD16 also supports two 12A H-Bridge reversing polarity circuits that can be used for loads such as engine hatches, passerelles, trim tabs, etc. The CLMD16 has 8 inputs for hard-wired switches that can be used to switch breaker states, or as inputs for other data such as bilge alarms or hatch positions, etc. There are 2 resistive inputs and 1 current loop input that can be used for various applications including tank level monitoring.

The CLMD16 handles many DC load types such as lights, pumps, motors, and electronics. An added benefit of the CLMD16 is that it reports the current through each of the 16 breakers. This allows you to determine if loads are drawing too much or too little electrical current. This information can be used to report over-current faults and undercurrent conditions.

Monitor and control onboard electrical and electronic systems and reset circuits onboard and remotely with the following devices:

- Any 3rd party MFD that supports standard digital switching PGNs
- Maretron MBB300C Black Box
  - Garmin OneHelm™
  - Raymarine LightHouse 3
- Maretron TSM Series Dedicated Touchscreen
- MPower VMM6 Digital Switch Module
- MPower CKM12 Keypad
- Any device running Maretron's award-winning N2KView® V3 Software

Product Features

- NMEA 2000® Interface
- IP67 Rated
- Ignition Protected
- Opto-Isolated from NMEA 2000, eliminating potential ground loops
- 16 Electronic Circuit Breakers (ECBs) for ON/OFF control over NMEA 2000 network
- 12 dimmable breakers
- 12 breakers carry 12 amps maximum, and 4 breakers are capable of carrying up to 25 amps
- Select breakers can be paralleled for larger loads.
- 2 sets of 12 amp breakers can be combined for reversing motor control
- Individual breaker electrical current monitoring
- Breakers can have power-up states defined (ON, OFF, or LAST STATE)
- Breakers can be locked against inadvertent actuation
- Capacitive touch switches for local control of all loads
- All inputs and outputs protected against short to power and short to ground
- Automatic ECB overcurrent shutdown
- Automatic ECB thermal shutdown (overtemperature protection)

PRODUCTS

PART NUMBER	DESCRIPTION
CLMD16-R	16-Channel DC Load Controller Module w/A3708, A3709 & A3710
CLMD16	16-Channel Load Controller Module
A3708	Output (J2) Mating Connector with 1m Flying Leads
A3709	Output (J1) Mating Connector with 1m Flying Leads
A3710	J3 (I/O Gen Purpose) Harness Kit
DTP06-4S	J1 (Output) Mating Connector, Deutsch
0462-203-12141	J1 (Output) 14AWG Socket, Deutsch

PART NUMBER	DESCRIPTION
WP-4S	J1 (Output) Wedge, Deutsch
DT06-12SA	J2 (Output) Mating Connector, Deutsch
0462-209-16141	J2 (Output) 14AWG Socket, Deutsch
W12S	J2 (Output) Wedge, Deutsch
1028-043-1205	J2 Back Shell, 12 Way Plug, Deutsch
DRC26-24SA	J3 (I/O General Purpose) Mating Connector, Deutsch
0462-201-20141	J3 (I/O General Purpose) 16-20AWG Socket, Deutsch
0413-204-2005	J3 Connector Seal Plug, 20 HD SER, Deutsch

SPECIFICATIONS

PARAMETER	VALUE
Number of Channels	16
Switching Voltage	< 32 VDC
Maximum Unit Current Capacity	125 amps
Maximum Channel Current Ratings	12x12A, 4x25A

CERTIFICATIONS

PARAMETER	COMMENT
NMEA 2000	Certified
CE Mark	Recreational Craft Directive 2014/35/EU
Lloyd's Certification	Pending

NMEA 2000® PARAMETER GROUP NUMBERS (PGNs)

DESCRIPTION	PGN#	PGN NAME	DEFAULT RATE
Periodic Data PGNs	127500	Load Controller Connection State & Control	1 time / 1.5 seconds and on switch change
	127501	Binary Status Report	1 time / 15 seconds and on switch change
	127751	DC Voltage / Current	1 time / 1.5 seconds
Response to Requested PGNs	126464	PGN List (Transmit and Receive)	N/A
	126720	Carling Proprietary	N/A
	126996	Product Information	N/A
	126998	Configuration Information	N/A
	130818	Maretron Proprietary	N/A
	130825	Maretron Proprietary	N/A
Protocol PGNs	059392	ISO Acknowledge	N/A
	059904	ISO Request	N/A
	060928	ISO Address Claim	N/A
	126208	NMEA Request/Command/Acknowledge	N/A
	126993	Heartbeat	1 time / 60 seconds
	130060	Label	N/A

Dimensional Specifications - Inch [mm]

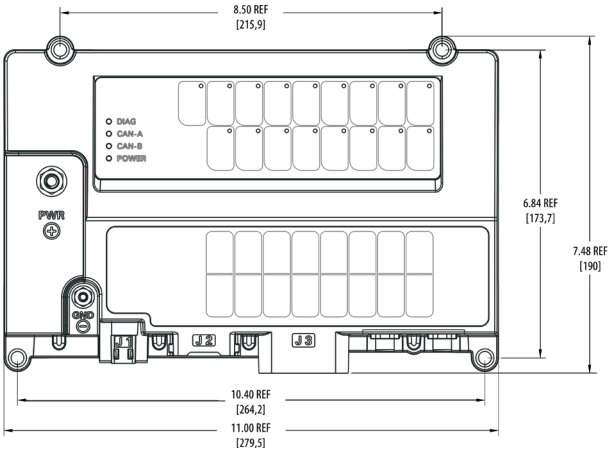

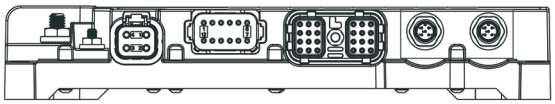

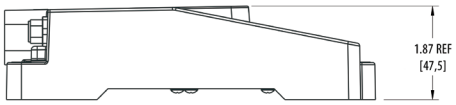

ELECTRICAL

PARAMETER	VALUE	COMMENT
Voltage Input Range	8 to 32 VDC	DC Voltage
Power Consumption	50mA	NMEA 2000 Interface
Load Equivalence Number (LEN)	1	NMEA 2000 Spec. (1LEN = 50 mA)
Reverse Battery Protection	Yes	5 minutes
Load Dump Protection	Yes	12V: 87V, 200ms pulse, 1Ω impedance 24V: 173V, 100ms pulse, 2Ω impedance
12A ECB peak current capacity	120 A	
25A ECB peak current capacity	250 A	
Channel Current Measurement Accuracy	+/- 0.5 amps	Typical
Channel Current Measurement Resolution	0.1 amps	
Minimum Channel Current Measurement	0.5 amps	
PWM Frequency	200 Hz	Breakers 3, 4, 5, 6, 7, 8, 9, 10
	20 kHz	Breakers 1, 2, 11, 12
Load	Inductive load interface	
Duty Cycle Range	10% – 100%	
Duty Cycle Resolution	1%	
Programmable Trip Level Resolution	1% increments	Between 20% to 100% of Channel Capacity (12A or 25A)
Analog/Digital Input Channels Input Resistance	1KΩ	
Input Voltage, Open Circuit	2.75 V	
Alarm Output Maximum Supplied Current	300mA	
Resistive Input Measurement Accuracy	5 Ω	
Resistive Input Measurement Precision	2 Ω	
Resistive Input Measurement Resolution	1 Ω	

MECHANICAL

PARAMETER	VALUE	COMMENT
Size	11.0" x 7.48" x 1.871" (279.4mm x 190.0mm x 47.5mm)	Including Flanges for Mounting
Weight	2.5 lb. (1.2 kg)	
Power Stud Torque Value	30 to 35 in-lbs. (3.39N·m - 3.95N·m)	
Ground Stud Torque Value	10 to 15 in-lbs. (1.13 -1.69N·m)	

VMM Series

Contura® Digital Switch Module, 6 Rocker

The VMM6 is a sealed multiplexed, digital switch module featuring the Carling V-Series Contura® Rocker Switches. Well known for their cutting-edge design, high quality, maximum performance and unmatched reliability, the VMM6 Series reduces the complexity and cost of traditional wiring harnesses, increases product life and reliability, and reduces installation time. Available in six simple configurations, VMM6 is a plug-and-play solution that delivers switching technology at a very attractive price point.

For customers that want the option to source aftermarket actuators, we offer two versions of the VMM6 without actuators (Part numbers A3801-5, A3801-6).

Product Features

- NMEA 2000® CAN Protocol
- IP68 Front Panel Sealing Protection
- Configurable
- Horizontal or Vertical Mounting Options
- Aftermarket Actuators Available
- LED Feedback of Circuit State
- Low Current Switching
- Tactile and Audible Feedback

Front View

SEALING PROTECTION
Fully sealed IP68 front panel (when connected)

CUSTOMIZABLE ICONS
Choose from our standard selection of icons, or customize your own. Consult the factory for additional options.

ROCKERS
Variety of Carling V-Series Contura® actuators

Back View

SEALING PROTECTION
Fully sealed IP68 back panel when connected and mating plug installed (included).

4 PIN CONNECTOR
The included mating plug must be installed to meet IP68 Rating for back panel.

SNAP-IN MOUNTING
For fast, easy assembly

6 PIN CONNECTOR
Mates to the VMM to NMEA 2000 Adapter Cable

VMM to NMEA 2000® Adapter Cable - .2m (A3702)

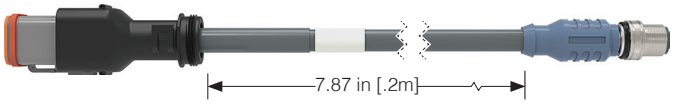

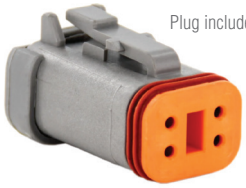

Plug included

PRODUCTS

PART NUMBER	DESCRIPTION
A3801-1	Contura II (ALL Position Momentary ON) w/A3702
A3801-2	Contura II (Right Switch 3-Position) w/A3702
A3801-3	Contura V (All Positions Momentary ON) w/A3702
A3801-4	Contura V (Right Switch 3-Position) w/A3702
A3801-5	No Actuators (ALL Positions Momentary ON) w/A3702
A3801-6	No Actuators (Right Switch 3-Position) w/A3702

PART NUMBER	DESCRIPTION
A3702	VMM to NMEA 2000® Adapter Cable - .2m
A3702-1	VMM to NMEA 2000® Adapter Cable - 1m
A3702-2	VMM to NMEA 2000® Adapter Cable - .2m (90° Deutsch Connector)
A3702-3	VMM to NMEA 2000® Adapter Cable - 1m (90° Deutsch Connector)

Dimensional Specifications - Inch [mm]

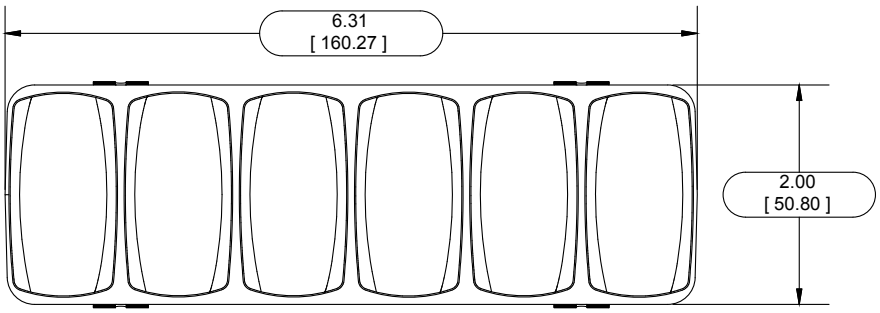

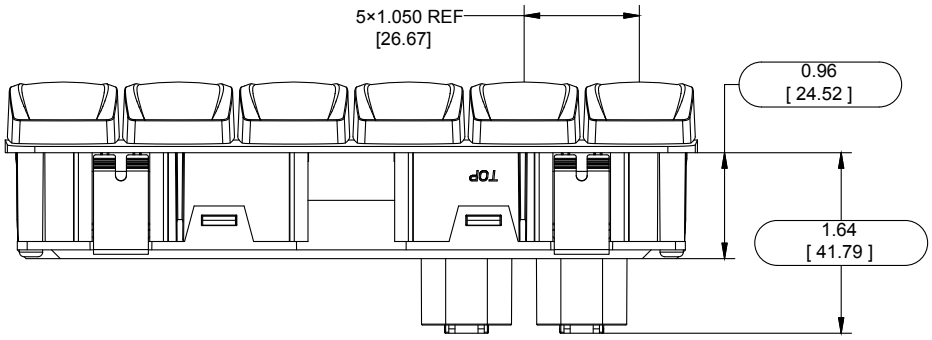

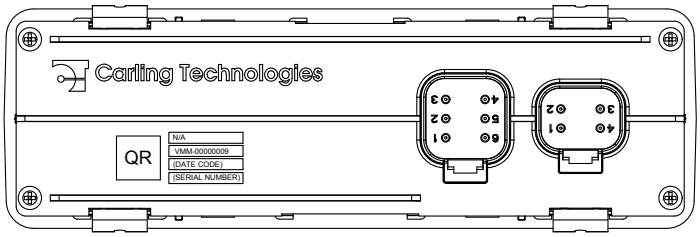

BUILT-IN RECEPTACLES COUPLE WITH DEUTSCH DT SERIES 4 AND 6 POSITION PLUGS

(4 POSITION RECEPTACLE RESERVED FOR FUTURE USE, PLUG INCLUDED)

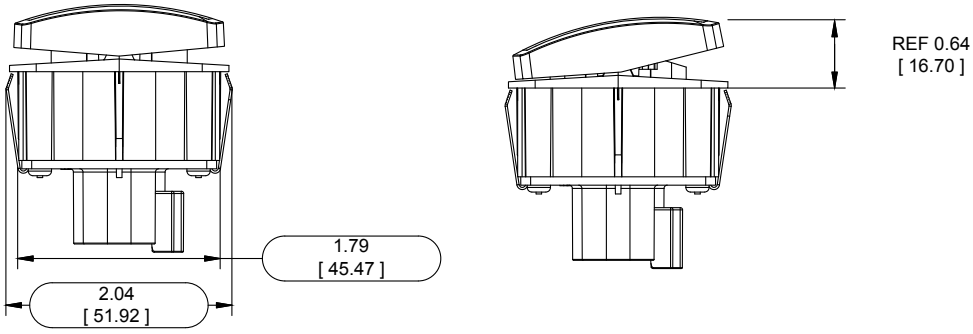

REQUIRED MOUNTING PANEL CUTOUT SIZE:

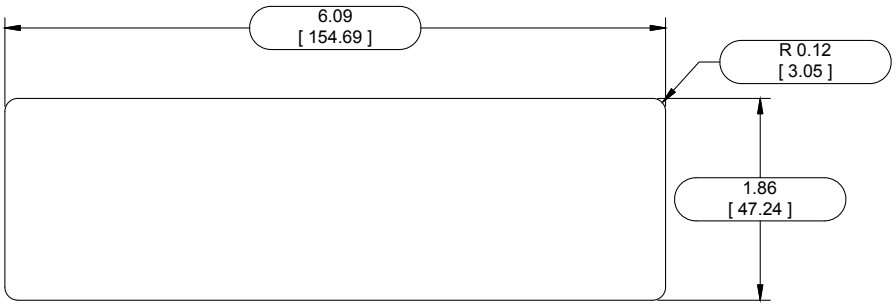

MINIMUM PANEL THICKNESS: 0.06 [1.57]

CKM Series

12-Button Customizable Keypad

The CKM12 is a customizable keypad featuring laser-etched legends and LED function lights for each button. The LEDs also provide diagnostics when fault conditions are detected.

With the rugged mechanical packaging (IP69K), the CKM12 can be installed inside or outside the cabin. The low-profile design offers a seamless dashboard look and it can be mounted either vertically or horizontally.

The CKM12 offers significant advantages over traditional electromechanical switches such as longer actuation cycle (1,000,000), reduced wiring harness and reduced installation time. The CKM12 is sold off the shelf in two configurations and includes a CKM to NMEA 2000® Adapter Cable.

Product Features

- NMEA 2000® CAN Protocol
- IP69K Front Panel Sealing Protection
- Configurable
- Diagnostic Feedback
- Standard or Custom Laser Etched Legends
- 1,000,000+ Button Actuation Cycles
- Low Current Switching
- Tactile and Audible Feedback

Front View

LOW PROFILE DESIGN
.57 inch [14.48 mm] thickness
(See dimensional specifications for more detail)

SEALING PROTECTION
IP69K front panel sealing protection

CUSTOMIZABLE ICONS
Choose from our standard selection of icons or customize your own. Consult the factory for additional options and minimum quantities for customization.

LED FUNCTION LIGHTS
Standard blue. Consult the factory for additional options.

Back View

SEALING PROTECTION
Fully sealed IP68 back panel when connected

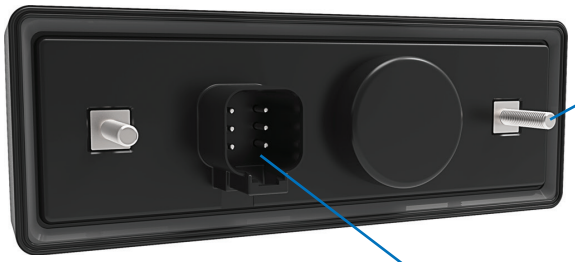

10-32 MOUNTING STUDS (2X)
Max tightening torque 30 inch lbs.

CONNECTOR
Mates to the CKM to NMEA 2000® Adapter Cable

CKM to NMEA 2000® Adapter Cable - .2m (A3703)

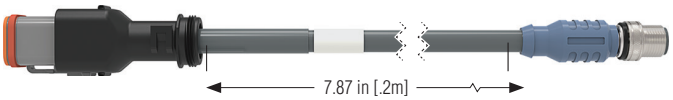

PRODUCTS

PART NUMBER	DESCRIPTION
A3802-1	CKM12 Keypad (Circle on Buttons) w/A3703
A3802-2	CKM12 Keypad (Number in Center of Circle on Buttons) w/A3703
A3703	CKM to NMEA 2000® Adapter Cable - .2m

PART NUMBER	DESCRIPTION
A3703-1	CKM to NMEA2000® Adapter Cable - 1m
A3703-2	CKM to NMEA2000® Adapter Cable - .2m (90° Deutsch Connector)
A3703-3	CKM to NMEA2000® Adapter Cable - 1m (90° Deutsch Connector)

Dimensional Specifications - Inch [mm]

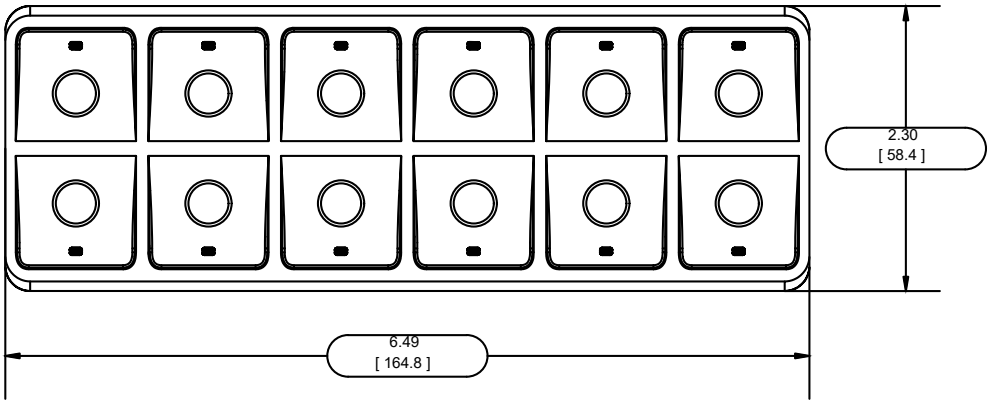

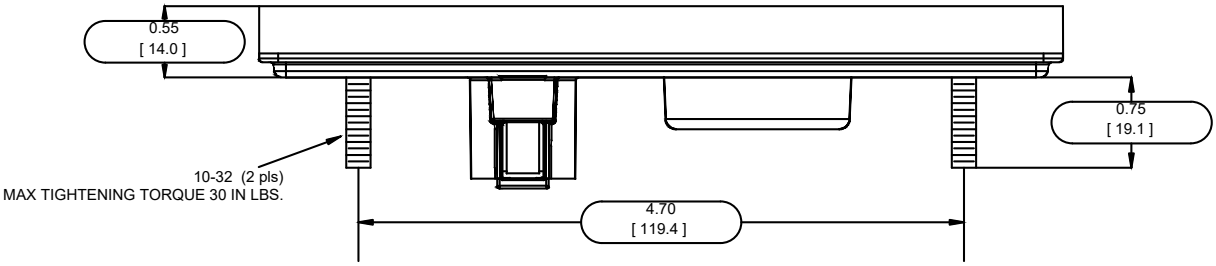

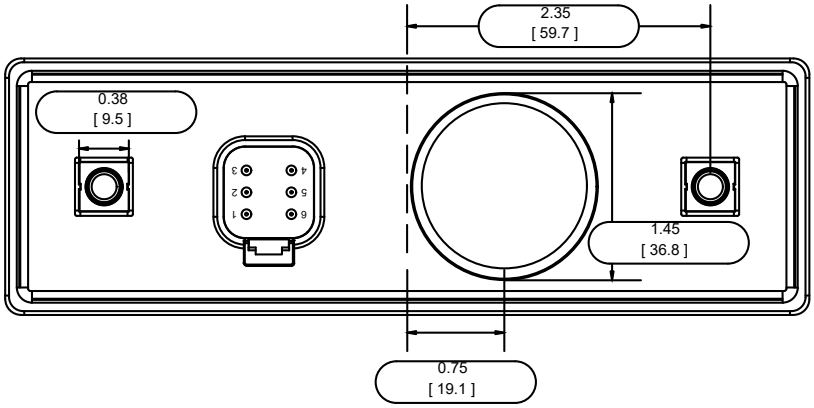

DEUTSCH PLUG DETAIL

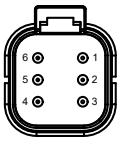

NO.	DESIGNATION
1	BATT +
2	CAN L
3	BATT -
4	
5	CAN H
6	CAN SHIELD

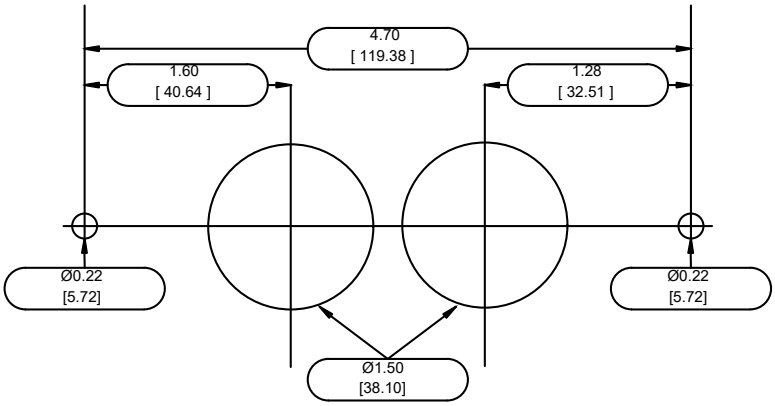

PANEL THICKNESS MIN: 0.05 [1.27] MAX: 0.30 [7.62]

MPower® Configuration Tools

Build. Analyze. Integrate. We are the NMEA 2000® Experts

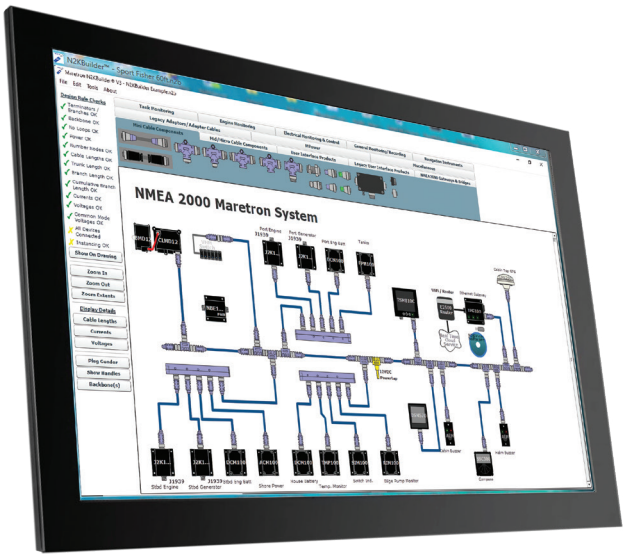

N2KBuilder® V3

NMEA 2000® Network Design Software

Map out your MPower® network design in N2KBuilder V3, a powerful, free PC-based software used to plan, document, and validate the design of complex NMEA 2000 networks. In addition, N2KBuilder V3 will directly produce a Bill of Materials (BOM) for Maretron products, eliminating guesswork and transcription errors. Maretron recently added an MPower Tab containing the builder information for the CLMD12, CLMD16, CBMD12, VMM6, and CKM12. With the latest version of N2KBuilder V3, configuration information created during the planning stage can be exported directly to N2KAnalyzer® V3.

www.maretron.com/products/N2KBuilder.php

Maretron®
Vessel Monitoring & Control

N2KAnalyzer® V3

NMEA 2000® Network Analysis Software

N2KAnalyzer V3 is a Maretron software tool, currently offered free of charge with the purchase of a Maretron NMEA 2000/USB gateway (USB100) or Maretron NMEA 2000/Ethernet gateway (IPG100). N2KAnalyzer V3 provides you with a detailed view of all of the devices on an NMEA 2000 network and lets you perform a variety of configuration, updating, and troubleshooting tasks. Configure MPower DC Load Controller Modules (CLMD12 and CLMD16) using N2KAnalyzer V3 and save your final configuration file using the N2KAnalyzer V3 'Save File' function.

www.maretron.com/products/N2KAnalyzer.php

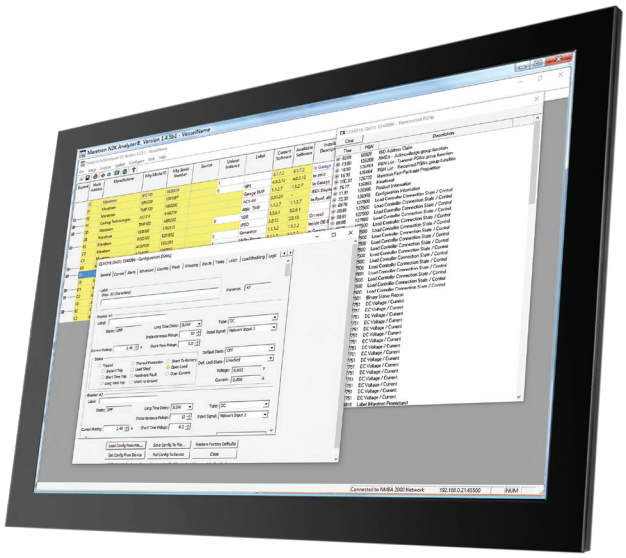

Maretron is Your Gateway to the NMEA 2000® Network

USB100

NMEA 2000® Network to USB Gateway

Part # USB100-01

Maretron's USB100 is a gateway for bridging computers to an NMEA 2000 network. This allows you to use PC based vessel monitoring and control software such as Maretron's N2KView® V3 or PC based navigation software. The gateway provides one simple connection between the network and the PC, eliminating conventional multiplexers and the maze of wires usually associated with interfacing equipment to PCs. When paired with N2KAnalyzer software, the USB100 provides a source for updating most Maretron equipment to the latest software version.

For PC based navigation software that requires receiving data in the NMEA 0183 format, the USB100 automatically converts information from the NMEA 2000 network to NMEA 0183 sentences. This allows you to continue benefiting from navigational and charting software that you already own while enjoying the many benefits of networked NMEA 2000 instruments.

Maretron®
Vessel Monitoring & Control

IPG100

NMEA 2000® Internet Protocol Gateway

Part # IPG100-01

Connect your PC, Mac, tablet or smartphone to an NMEA 2000 network with the IPG100 Internet Protocol Gateway. Monitor and control your vessel's systems onboard and remotely using Maretron's N2KView® V3 software or Maretron's N2KView® Mobile App.

The IPG100 has an NMEA 2000 connector and an Ethernet data port for exchanging information between the onboard NMEA 2000 network and Internet Protocol (IP) enabled devices using conventional technology such as routers, switches, and wireless modems. Once enabled, the IPG100 will automatically connect to Maretron's Real Time Cloud Service (subscription required), allowing you to remotely connect to your vessel via the Internet. This allows you to keep an eye on your vessel from anywhere in the world.

We've got your back[bone].

*We are your **ONE** source for creating the intelligent boat—from cables and connectors to complete vessel monitoring and control solutions.*

Maretron®

VESSEL MONITORING AND CONTROL

NMEA 2000® Hardware and Software Solutions

MPower®

DIGITAL SWITCHING PLATFORM

Flexible, Scalable DC Control Solutions

OctoPlex®

POWER DISTRIBUTION SYSTEM

Fully Configurable AC and DC Control Solutions

maretron.com