OctoPlex®

Power Distribution System

image courtesy of Ocean Alexander

G2-Series

Installation & Operation Guide

Littelfuse®

Carling Technologies®
A Littelfuse® Brand

www.octoplex.com 866.550.9100 marine.sales@carlingtech.com

User Information

The purpose of the OctoPlex® Installation Guide is to educate the system users and/or installers on the components that create the OctoPlex system. Its primary purpose is not only to educate but also act as a troubleshooting guide that will aid in making sure that the system is operating to its full potential as designed or intended. The OctoPlex Installation Guide serves as a reference guide only. For more information contact Carling Technologies® at sales@carlingtech.com or visit www.carlingtech.com.

A periodic check of all mounting hardware and connections is recommended. The OctoPlex products are not ignition-protected devices and shall not be installed in areas with combustible fumes.

Disclaimer: With respect to the use or application of the OctoPlex System and/or its components, Carling Technologies Inc.'s liability to the installer or user shall be limited to direct economic damage or loss, provided in any and all circumstances, the guidelines herein are strictly followed. NOTWITHSTANDING THE FOREGOING IN NO EVENT SHALL CARLING TECHNOLOGIES, INC. BE LIABLE FOR ANY INCIDENTAL, SPECIAL, INDIRECT, OR CONSEQUENTIAL DAMAGES, WHETHER RESULTING FROM THE USE, MISUSE, OR INABILITY TO USE THIS PRODUCT OR FROM DEFECTS IN THIS PRODUCT. Some states do not allow the exclusion of incidental or consequential damages, so the above limitation may not apply to customers in those states.

All illustrations contained in this Installation and Operation Guide are for reference purposes only. Nothing contained in this Guide shall replace or modify the requirements of any Industry Standard applicable to wire or other protection, including without limitation, those of the American Boat and Yacht Council (ABYC); the National Electric Code (NEC); and/or the National Fire Protection Association (NFPA). Failure to install the OctoPlex System or any components thereof in compliance with any such Industry Standard may limit the warranties made by Carling Technologies, Inc. See warranty information for further details. www.carlingtech.com/octoplex-warranty

The contents of this installation guide are copyright 2016 Carling Technologies, Inc. This Guide or its contents or any part thereof shall not be copied or otherwise replicated, or, distributed to third parties and may only be used by the installer builder, owner, operator, or another user for the purposes described herein.

OctoPlex is a registered trademark of Carling Technologies, Inc.
NMEA 2000 and the NMEA logo are registered trademarks of the National Marine Electronics Association. Lloyd's Type Approved logo is a registered trademark of Lloyd's Register Group Service Limited, 2016.

CAUTION!

This symbol identifies information that is **IMPORTANT** to the practices and/or installation of the product.

HIGH VOLTAGE!

This symbol alerts individuals that **HIGH VOLTAGE** may be present in, on or around the product.

WARNING!

This symbol identifies information that is **CRITICAL** to the practices and/or installation of the product.

NOTE

This symbol indicates additional configurable information to the user.

CERTIFICATIONS

CE Approved
IEC60533 Electrical and Electronic Installations in Ships
IEC60945 Maritime Navigation and Radio communications Equipment and Systems

NMEA 2000® Approved
Certified, Category B

Lloyd's Type Approved
Test Specification #1, ENV2 Certificate No. 10/00021

Table of Contents

System Overview 2

Multi-Function Displays (8, 12 inch) 4
- Installation ... 5
- Maintenance ... 17
- Troubleshooting ... 18
- Dimensional Specs ... 18
- Tech Specs ... 20

AC Power Distribution Units (8, 13, 19 Position) 21
- Configuration ... 22
- Installation ... 25
- Operation ... 26
- Maintenance ... 28
- Tech Specs ... 33
- Dimensional Specs ... 34

DC Power Distribution Unit (8, 16 Position) 37
- Configuration ... 28
- Installation ... 40
- Operation ... 41
- Maintenance ... 43
- Tech Specs ... 46
- Dimensional Specs ... 47

Network Power Supply 49
- Installation ... 49
- Operation ... 51
- Maintenance ... 51
- Tech Specs ... 52
- Dimensional Specs ... 50

Battery Monitor 53
- Installation ... 53
- Operation ... 55
- Maintenance ... 55
- Tech Specs ... 56
- Dimensional Specs ... 57

AC Power Monitor 58
- Installation ... 58
- Operation ... 60
- Maintenance ... 61
- Tech Specs ... 62
- Dimensional Specs ... 63

System Interface Unit Monitor (SIU) 64
- Configuration ... 64
- Installation ... 66
- Operation ... 67
- Maintenance ... 67
- Tech Specs ... 68
- Dimensional Specs ... 68

NMEA 2000® Network Installation Guide 69

Trouble Shooting Guide 74

Appendix 77

G-2 Series

Intelligence for Greater Performance

The Carling Technologies® OctoPlex® system puts the user in complete control of all AC and DC loads within the vessel. Utilizing an NMEA2000® CAN bus network, system reliability and safety are achieved through a redundant architecture that eliminates single point failures. The OctoPlex system offers significant weight reduction in wiring and reduced installation complexity, while also allowing for the monitoring and control of common NMEA2000 marine devices, such as compass, GPS, tank level adapters and more. Field-replaceable AC and DC circuit breakers can be controlled remotely through the NMEA2000 network, allowing panels to be placed in remote locations, thereby eliminating the need for traditional large electrical panels.

Through the use of a Multi-Function Display, Carling Technologies has created a fully configurable and/or customizable user interface. Acting as the main human interface of the system, the Multi-Function Display brings the system functions, status reports and alarms directly to the user.

The OctoPlex® suite of products also includes the Network Power Supply that provides power to and diagnostics for the system's redundant CAN bus, a Battery Monitor to report vital battery status and a System Monitor, which offers a generic switch status report for discrete signals such as bilge pumps, alarms, and more.

1

Battery Monitor

Measures and reports 12 and/or 24 VDC, single high-side current and up to four battery temperatures. Configurable alarm thresholds for voltage, current and temperature can be displayed via the MFD.

2

AC Power Distribution Unit 8, 13 and 19 Position

Provides AC circuit protection, remote ON/OFF actuation and status monitoring (single, double or three-pole breakers).

6

DC Power Distribution Unit 8 and 16 Position

Provides DC circuit protection and remote control for up to sixteen DC circuits. Each circuit has a fully configurable trip profile.

7

Multi-Function Display

A configurable 8.1 or 12.1-inch dedicated Multi-Function Display (MFD) provides an extremely simple interface for system control and monitoring.

1 2 3

3

AC Power Monitor

Measures and reports status of up to four AC lines including voltage, current and frequency. It can be used in 110V, 220V, three phase and 240V European applications.

4

System Interface Unit Monitor (SIU)

Monitors and reports the status for up to 34 discrete inputs. Also suitable for reporting status of bilge float switches, hatch door open/closed, dimming, etc.

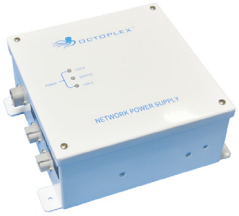

5

Network Power Supply

Provides regulated power to the dual NMEA2000 network.

8

DC Power Distribution Unit 8 Position

Provides DC circuit protection and remote control for up to eight DC circuits. Each circuit has a fully configurable trip profile.

Remote Vessel Monitoring via N2KView® Software

Web Server

Allows integration with MFD manufacturers including Garmin® OneHelm™ and Raymarine's® LightHouse™.

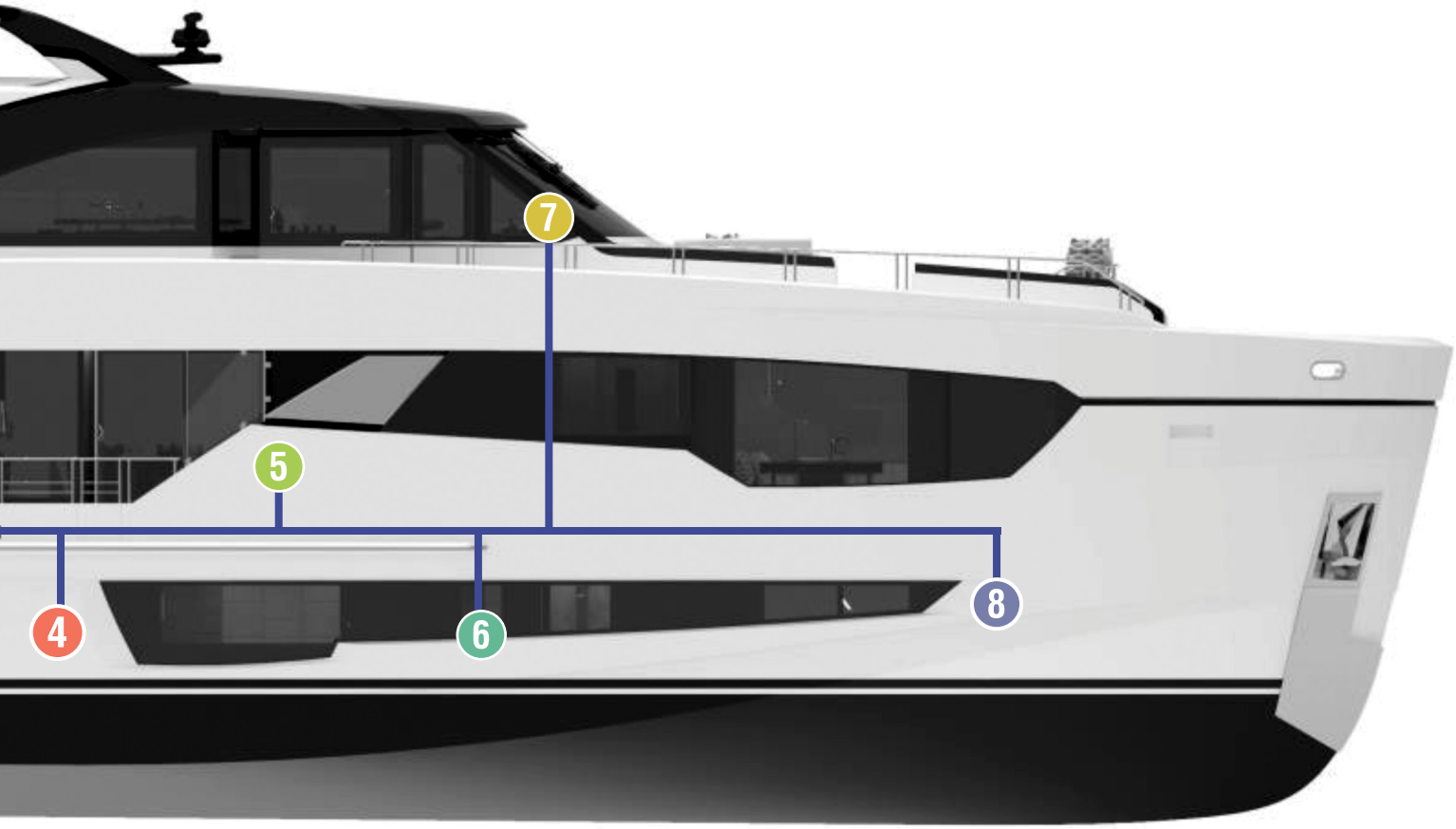

A3419 and A3422 Touchscreens

The A3419 and A3422 are 8” and 12.1” dedicated touchscreens that includes Carling’s N2KView® vessel monitoring and control software. The N2KView® software allows you to configure as many favorite screens as you want with exactly the information you want to see. They provide an extremely simple touch interface for monitoring and controlling critical systems from anywhere on the vessel.

The A3419 and A3422 are ruggedized for marine use and includes a solid state disk drive to withstand the pounding associated with waves. And since the A3419 and A3422 only dissipates 10 watts, there is no need for internal cooling fans that are noisy and wear out causing electronics to overheat and fail. The A3419 and A3422 can be mounted outside given the high bright screen and waterproof front.

As an alternative to controlling the A3419 and A3422 through the touchscreen, the A3419 and A3422 includes two USB ports for connecting keyboards, mice, or trackballs. The A3419 and A3422 also have an Ethernet port for connecting Internet Protocol (IP) cameras for viewing within the N2KView® software. Lastly, the A3419 and A3422 contains two completely isolated CAN bus connectors (M12) for easy connection to single or redundant NMEA 2000® networks.

Product features:

- 8” & 12.1” TFT LCD panel, LED backlit
- Widescreen aspect ratio 5:3 & 16:10
- 800 x 480 pixels (A3419)
  1280 x 800 pixels (A3422)
- 1350 & 1500 nits brightness (optically bonded)
- Solid state disk drive
- Fanless cooling system
- Flush or VESA mounting
- Dual CAN Bus for single or redundant NMEA 2000® Network Connections

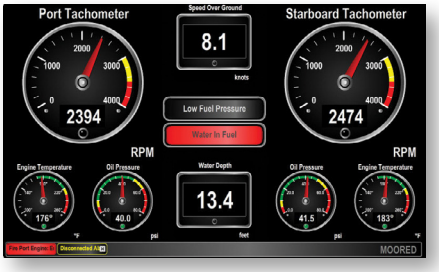

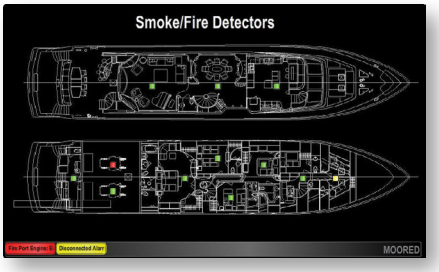

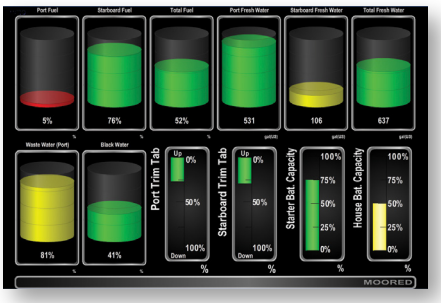

PRODUCTS

PART NUMBER	DESCRIPTION
A3419	8” MFD, front mount only
A3420	8” MFD, Front or Rear mount
A3421	8” MFD, Rear mount only
A3422	12.1” MFD, front mount only

Installation

Unpacking the Box

When unpacking the box containing the A3419 or A3422, you should find the following items:

- 1 – A3419 8” or A3422 12.1 Vessel Monitoring and Control Touchscreen
- 2 – Snap On Bezels
- 1 – Blue USB Drive Containing (among other documents)
  - 1 – User’s Manual
  - 1 – N2KView® Documentation
- 1 – 1m USB Cable with Waterproof Bulkhead Connector
- 1 – Warranty Registration Card

If any of these items are missing or damaged, please contact OctoPlex.

CAUTION!

To prevent damage to chassis corners and/or breaking front glass, please review the illustrations below before handling the A3419 and A3422.

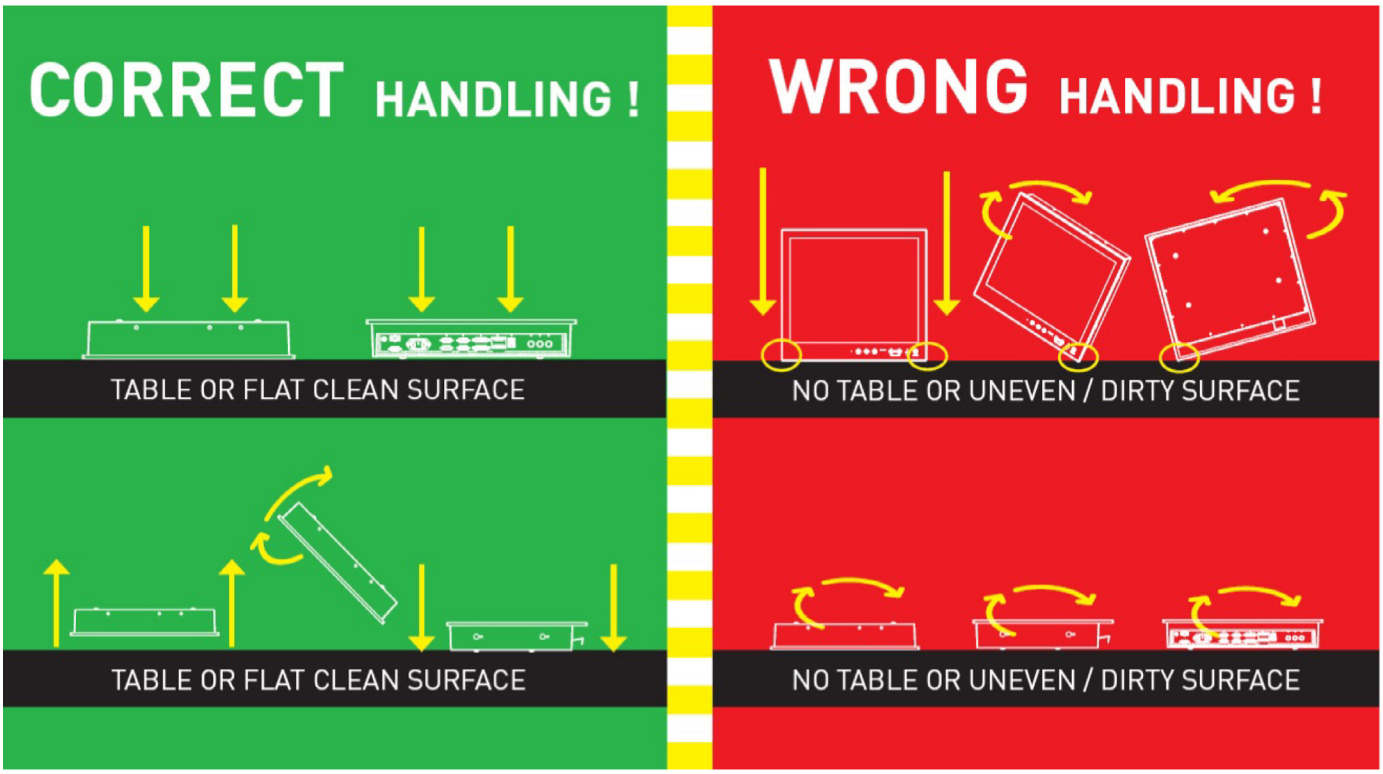

Choosing a Mounting Location

The A3419 and A3422 front panel is splash proof (IEC IP66 rating – protected against the effects of powerful water jets), while the rear of the A3419 and A3422 is drip proof (IEC IP22 rating – protected against the effects of dripping water when tilted up to 15°). The A3419 and A3422 may be mounted either in an indoor or outdoor location.

Adequate ventilation is a necessary prerequisite for the life of the product. The air inlet and outlet openings must definitely be kept clear; coverings which restrict ventilation are not permissible.

Generally, do not install the unit in a horizontal position (laying down), as this will cause heat to build up inside the unit which will damage the LCD Panel. To prevent this problem, we recommend installing the unit in a vertical position (±30 degrees) to improve the airflow through the unit.

To further improve the cooling of the unit, we recommend installing Cooling Fans underneath blowing upwards into the unit air inlet. This may be required in high temperature applications and also when there is reason to expect temperature problems due to non-optimal way of mounting.

Exposure to extreme direct sunlight can cause a considerable increase in the temperature of the unit, and might under certain circumstances lead to over temperature. This point should already be taken into consideration when the bridge equipment is being planned (sun shades, distance from the windows, ventilation, etc.).

Space necessary for ventilation, for cable inlets, for the operating procedures and for maintenance, must be provided. The NMEA 2000 cables require at least 140mm (5.5”) clearance from the back surface of the A3419 and A3422 for the plug and cable minimum bend radius. If a 90° field attachable connector is used on the cable, then this can be reduced to 51mm (2”)

Proper strain relieve should be installed on cables attached to the A3419 and A3422 so that cable breaks will not occur, e.g. during service work.

Do not paint the product. The surface treatment influences on the excess heat transfer. Painting, labels or other surface treatments that differ from the factory default, might cause overheating.

Expose to heavy vibration and acoustic noise might under certain circumstances affect functionality and expected lifetime. This must be considered during system assembly and installation. Mounting position must carefully be selected to avoid any exposure of amplified vibration.

Mounting Considerations

The useful life of the components of all Electronics Units generally decreases with increasing ambient temperature; it is therefore advisable to install such units in air-conditioned rooms. If there are no such facilities, these rooms must at least be dry, adequately ventilated and kept at a suitable temperature in order to prevent the formation of condensation inside the display unit.

Since the A3419 and A3422 is fanless, cooling takes place via the surface of the casing. The cooling must not be impaired by partial covering of the unit or by installation of the unit in a confined cabinet.

In the area of the wheel house, the distance of each electronics unit from the magnetic standard compass or the magnetic steering compass must not be less than the permitted magnetic protection distance. This distance is measured from the center of the magnetic system of the compass to the nearest point on the corresponding unit concerned.

Units which are to be used on the bridge wing must be installed inside the “wing control console” protected against the weather. In order to avoid misting of the viewing screen, a 25 ... 50 W console-heating (power depending on the volume) is recommended.

When selecting the site of a display unit, the maximum cable lengths have to be considered.

When a product is being installed, the surface base or bulkhead must be checked to ensure that it is flat in order to avoid twisting of the unit when the fixing screws are tightened, because such twisting would impair mechanical functions. Any unevenness should be compensated for by means of spacing-washers.

Transportation damage, even if apparently insignificant at first glance, must immediately be examined and be reported to the freight carrier. The moment of setting-to-work of the equipment is too late, not only for reporting the damage but also for the supply of replacements.

The classification is only valid for approved mounting brackets provided by OctoPlex. The unit shall be mounted stand-alone without any devices or loose parts placed at or nearby the unit. Any other type of mounting might require test and re-classification.

Ergonomics

Adjust the unit height so that the top of the screen is at or below eye level. Your eyes should look slightly downwards when viewing the middle of the screen.

Adjust screen inclination to remain gaze angle to the center of the screen approximately perpendicular to the line of gaze.

When products are to be operated both from a sitting position and from a standing position, a screen inclination of about 30° to 40° (from a vertical plane) has turned out to be favorable.

The brightness of displays is limited. Sunlight passing directly through the bridge windows - or its reflection – which falls upon the screen workplaces must be reduced by suitable means (negatively inclined window surfaces, venetian blinds, distance from the windows, dark coloring of the deckhead). These units are equipped with optical enhanced technology to reduce reflections and are viewable in direct sun light, but as a general rule the units at the bridge wing area is recommended to be installed or mounted by suitable alignment or bulkhead /deckhead mounting in such a way that reflections of light from the front panel of the display are not directed into the observer’s viewing direction.

The use of ordinary commercial filter plates or filter films is not permitted for items of equipment that require approval (by optical effects, “aids” of that kind can suppress small indicators, for example).

Front Mounting

Mounting the A3419 and A3422 on a wall or panel requires a cutout in the wall or panel. Please ensure there is sufficient space behind the unit to connect the NMEA 2000 cables. Typically they require 190mm (7.5”) for a straight connector, or 102mm (4”) for a right angle connector, measured from the front face of the wall or panel.

Step #1:
Select the position on the panel or wall to mount the A3419 and A3422.

Step #2:
Cut out a section from the panel that corresponds to the rear panel dimensions of the A3419 and A3422. Take care that the panel section that is cut out is smaller than the overall size of the front panel of the A3419 and A3422 but just large enough for the rear panel of the A3419 and A3422 to fit through, according to the dimensions in Figure 2.

Step #3:
Slide the TSM810 through the hole from the front until the frame is flush against the panel and then mark the positions of the 6 mounting holes. Remove the TSM810 before drilling the holes.

Step #4:
Drill six 5.5mm holes for the mounting screws according to the dimensions in Figure 2.

Step #5:
Slide the A3419 and A3422 through the hole until the frame is flush against the panel.

Step #6:
From the front of the panel, place six #10 flat/countersunk bolts through the A3419 and A3422 frame and the panel, add washers and nuts, and tighten until the display is firmly secured to the panel. Suitable #10 countersunk screws may be used in place of the bolts for wall mounting. The bolts and screws are not provided by OctoPlex.

Step #7:
Clip the two bezels on to the front of the touchscreen, hiding the screws.

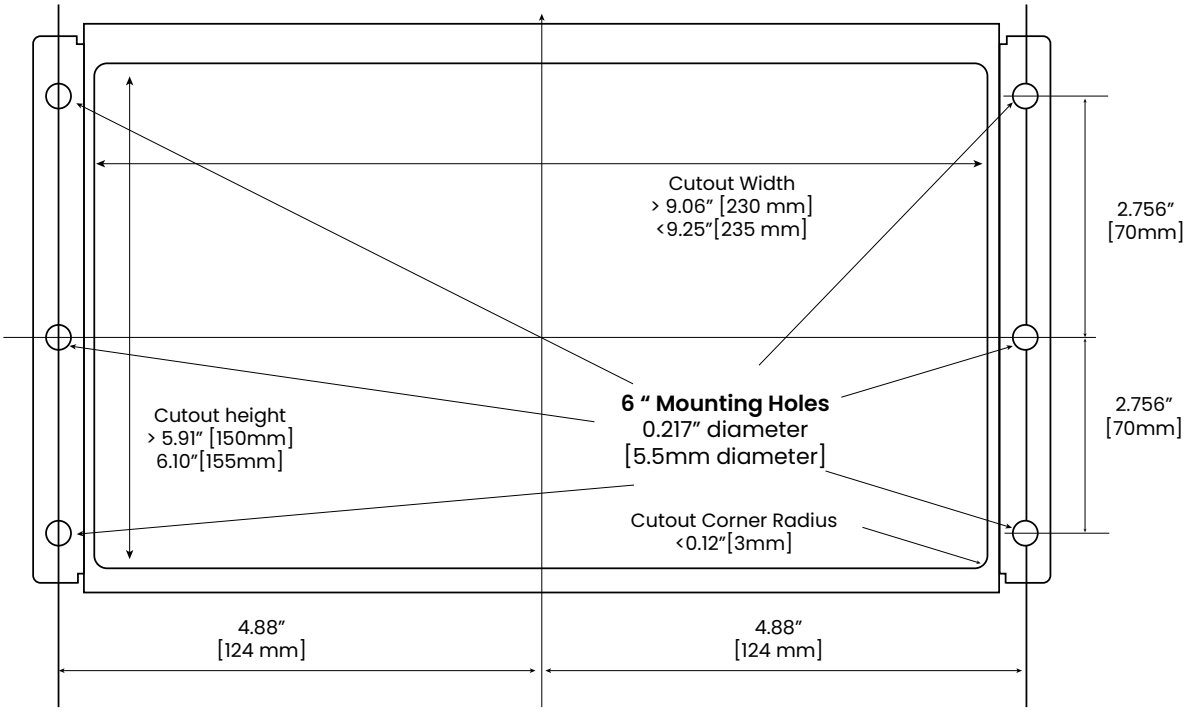

Figure 2a – A3419 Cutout Dimensions (not to scale)

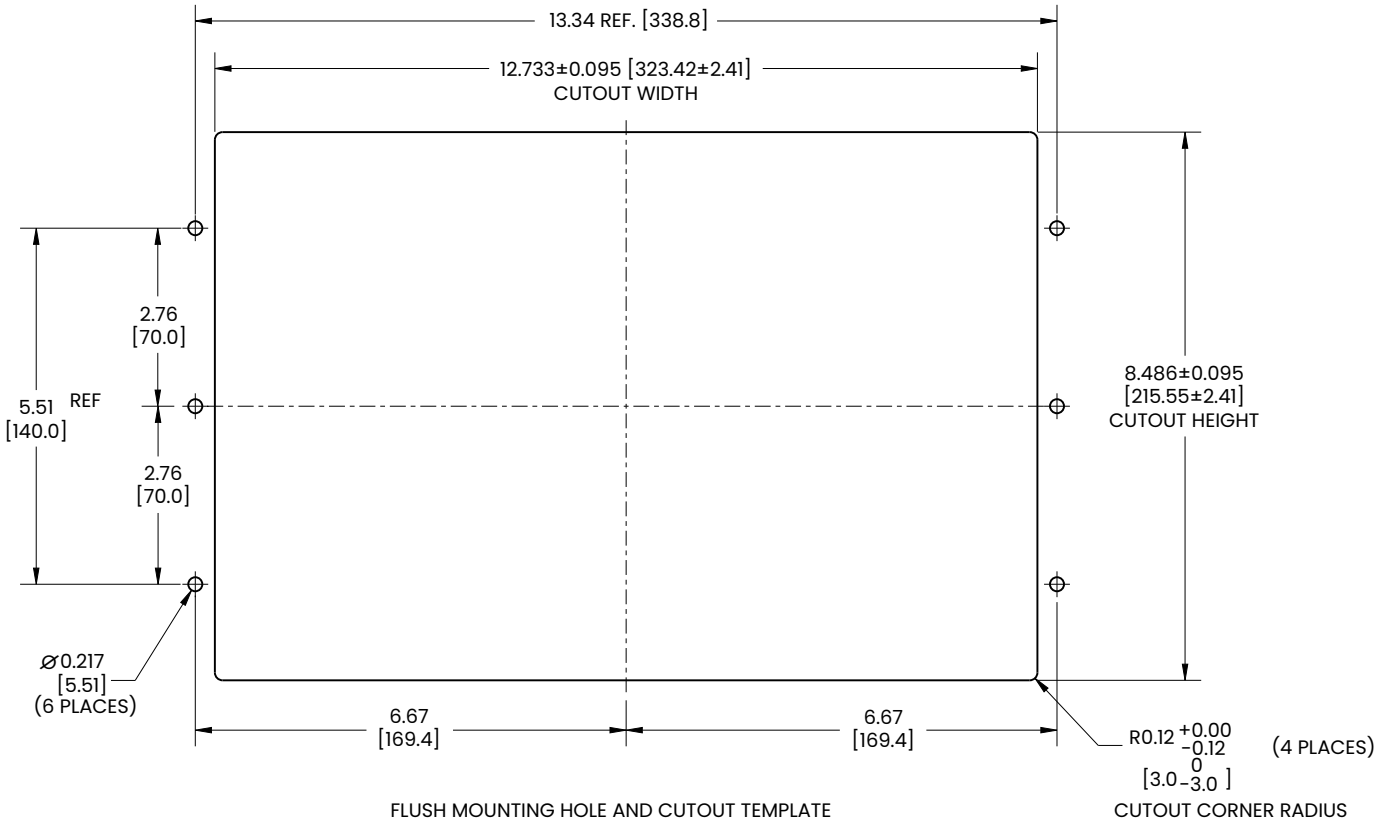

Figure 2b – A3422 Cutout Dimensions (not to scale)

Rear Mounting

Mounting the A3420 or A3421 on a wall or panel requires a cutout in the wall or panel. Please ensure there is sufficient space behind the unit to access the mounting thumb screws & to connect the NMEA-2000 Cables. Typically they require 190mm (7.5”) for a straight connector or 102MM (4”) for a right angled connector, measured from the front face of the wall or panel.

Step #1:
Select the position on the wall or panel to mount the A3420 or A3421.

Step #2:
Cut out a section that corresponds to the rear panel dimensions of the A3420 or A3421. Take care that the panel section that is cut out is smaller than the overall size of the front panel of the A3420 or A3421 but large enough for the rear panel to fit through according to the dimensions in Figure 3 and 4.

Step #3:
Preassemble the back plate with the two brackets & thumb screws mounted to it. Slide the TSM-810 through the front hole until the frame is flush against the panel. From the rear, attach the back plate over the studs on the rear of the screen & attach using the supplied nuts & washers.

Step #4:
Once the rear mounting panel is secure, tighten up the two thumb screws until the screen is firmly in place in its cutout.

Step #5:
Finally, connect all cables & wiring.

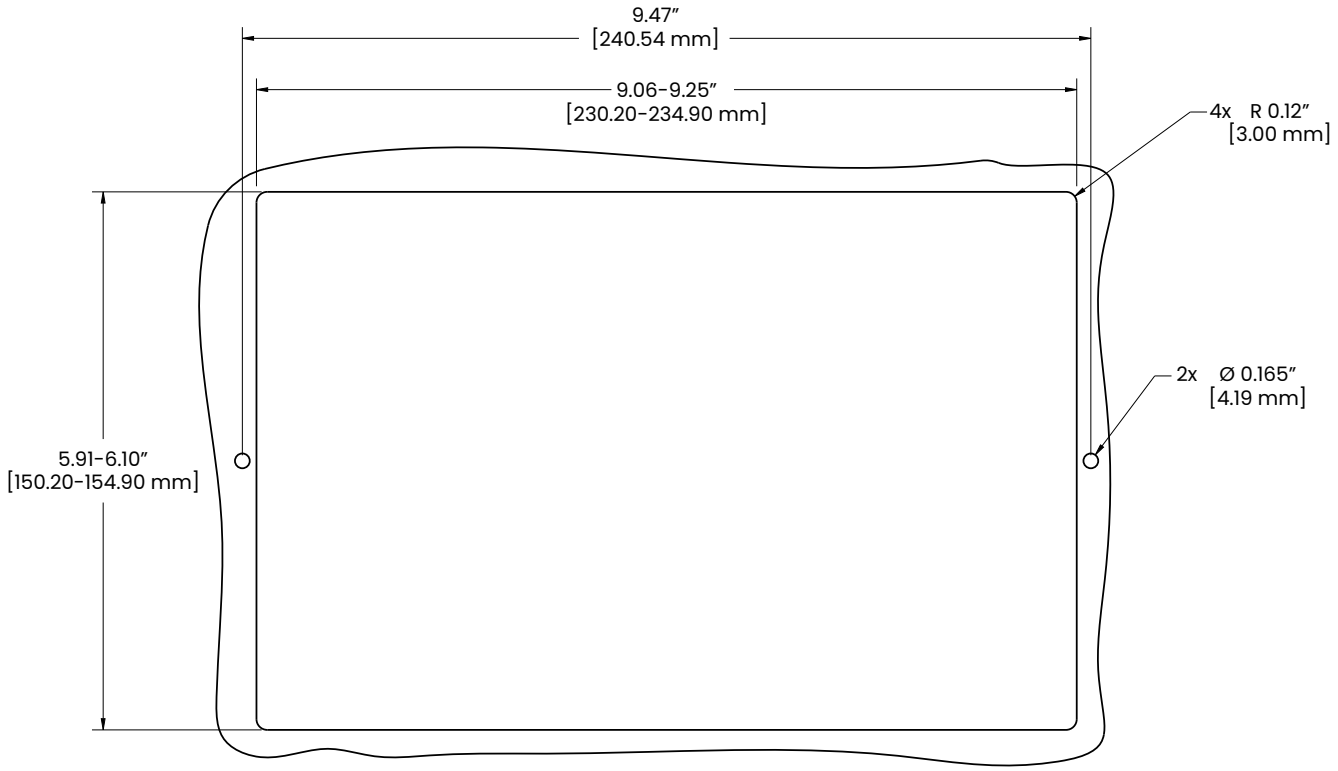

Figure 3 – A3420 or A3421 Rear Panel Mount Cutout

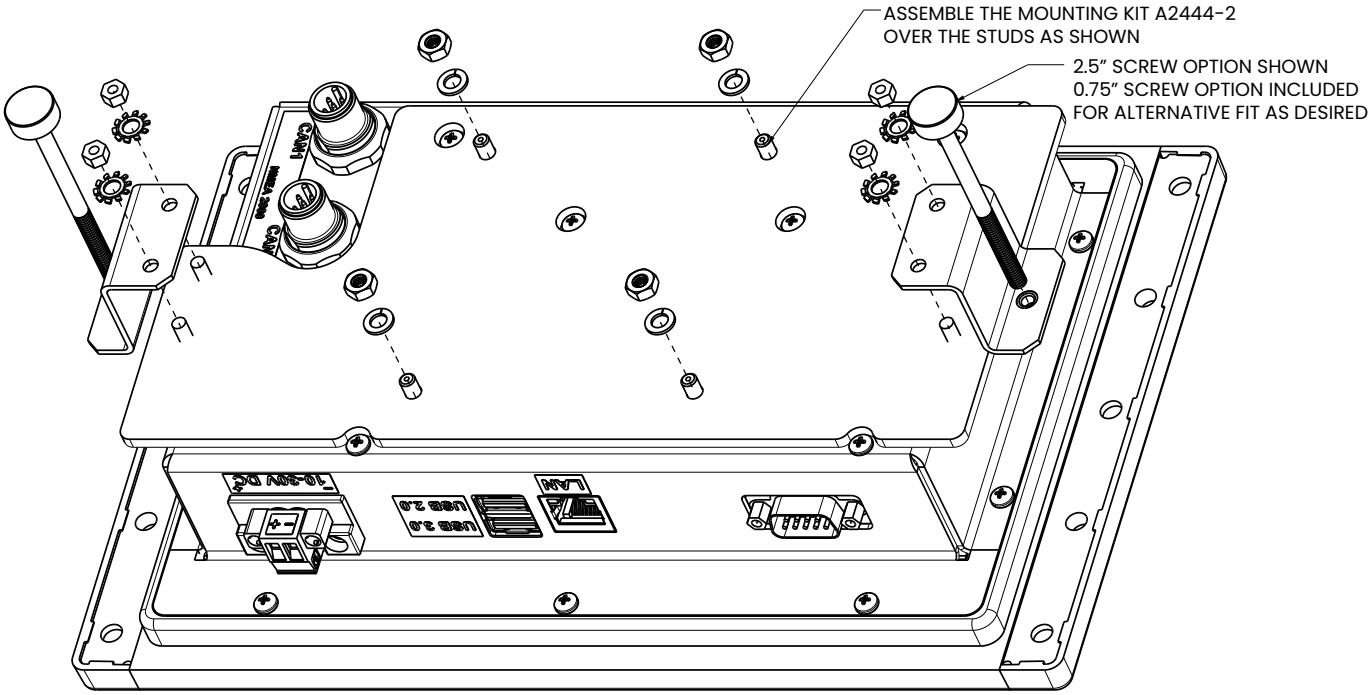

Figure 4a – A3420 Rear Panel Mount - Standard Display with Mounting Bracket Kit

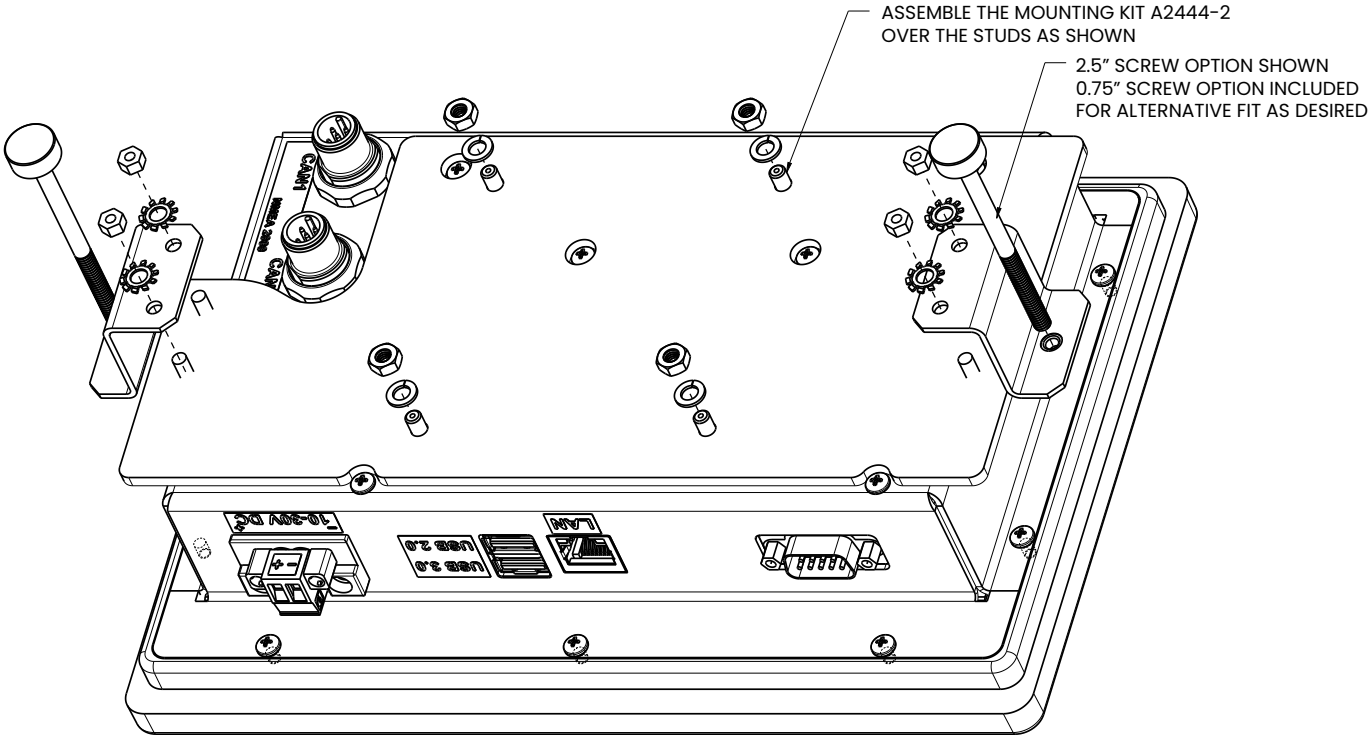

Figure 4b – A3421 Rear Panel Mount - Alternate Display Construction using Front Housing M003104

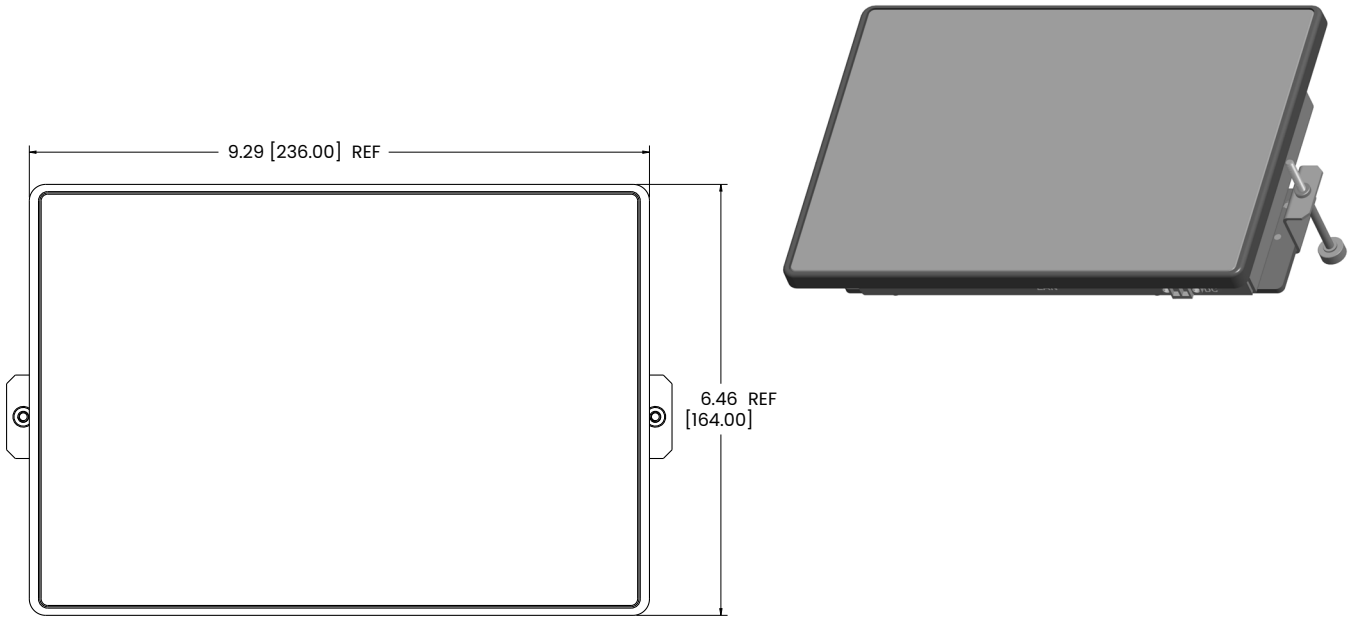

Figure 4c – A3421 Rear Panel Mount - Alternate Display Construction using Front Housing M003104

Connecting the Touchscreen

Most I/O interface connections of the A3419 and A3422 are found on the bottom panel. The I/O interface panel located on the bottom of the A3419 and A3422 has the following I/O interface connectors:

- 24V DC Power input connector
- 1 x RJ-45 Gigabit Ethernet LAN port
- 1 x USB 2.0 connector
- 1 x USB 3.0 connector

Additionally, the rear panel of the A3419 and A3422 has the following interface connectors:

- 2 x M12 (DeviceNet Micro) NMEA 2000 ® network CAN connectors

The bottom panel and rear panel of the A3419 is shown in Figure 5.

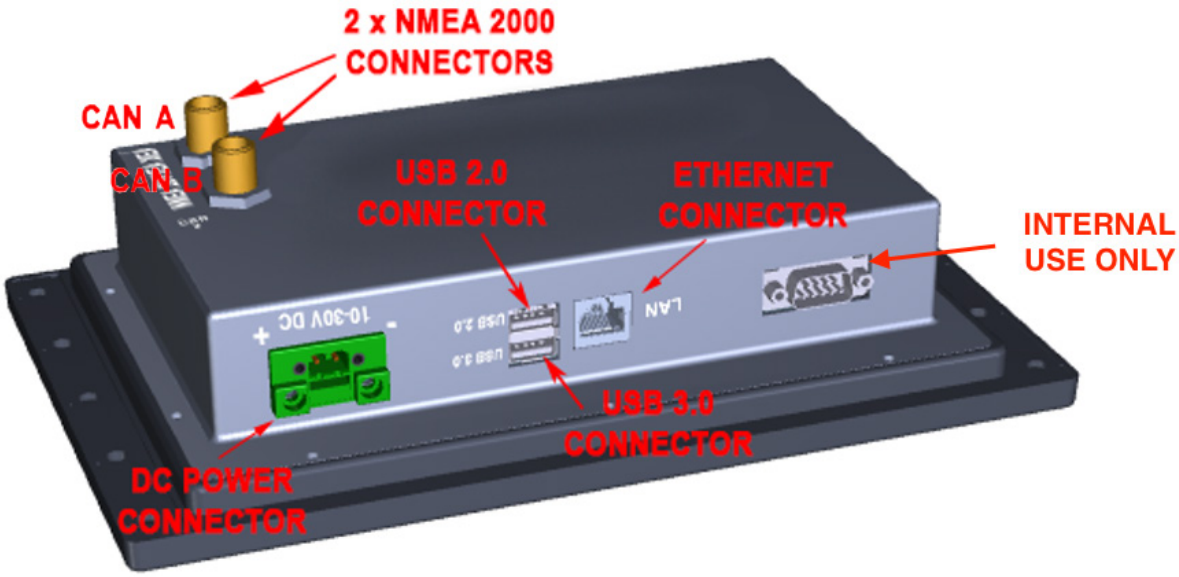

Figure 5 – A3419 Bottom and Rear Panels

LAN Connection

NOTE

The LAN Connection is not necessary unless you are using any of the following features:
- Video
- E-mail actions on Alerts

There is one external RJ-45 LAN connector. The RJ-45 connector enables connection to an external network. To connect a LAN cable with an RJ-45 connector, please follow the instructions below.

Step #1:
Locate an RJ-45 connector on the bottom panel of the A3419 and A3422.

Step #2:
Align the connector. Align the RJ-45 connector on the LAN cable with the RJ-45 connector on the bottom panel of the A3419 and A3422. See Figure 6.

Step #3:
Insert the LAN cable RJ-45 connector. Once aligned, gently insert the LAN cable RJ-45 connector into the onboard RJ-45 connector.

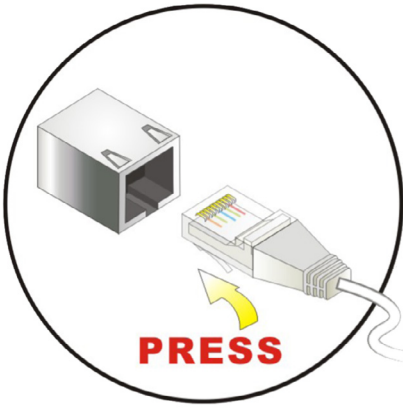

Figure 6 – LAN Connection

USB Device Connection

There is one USB 3.0 connector and one USB 2.0 connector. The USB connectors are used to transfer N2KView® configurations between the A3419 and A3422 and other N2KView® devices, and for applying software updates to the A3419 and A3422. Install the included waterproof USB bulkhead connector in a position where it is easily accessible and plug into one of the USB connectors on the A3419 and A3422 per the instructions below. This will make the USB connection easily accessible once the A3419 and A3422 is installed.

The USB connectors may optionally be used to install USB keyboards or USB mice for an alternative means of controlling the A3419 and A3422 user interface.

To connect a USB 3.0, USB 2.0 or USB 1.1 device, please follow the instructions below. If a USB 3.0 device is plugged into the USB 2.0 port, the USB 3.0 device will downgrade to USB 2.0 speeds.

Step #1:
Locate the USB connectors. The locations of the USB connectors are shown in Figure 5.

Step #2:
Align the connectors. Align the USB device connector with one of the connectors on the bottom panel. See Figure 7.

Step #3:
Insert the device connector. Once aligned, gently insert the USB device connector into the onboard connector.

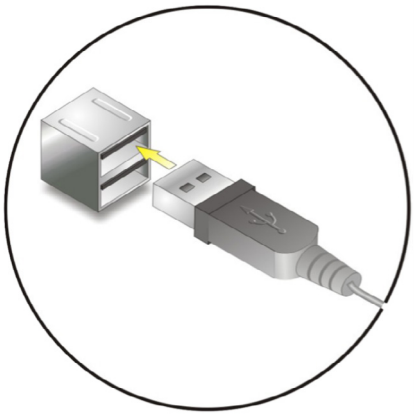

Figure 7 – USB Device Connection

Power Connection

The A3419 and A3422 must be connected to a power source (over current protection should be provided and should be sized in accordance with ABYC E-11, AC and DC ELECTRICAL SYSTEMS ON BOATS). The A3419 and A3422 provides one power connection.

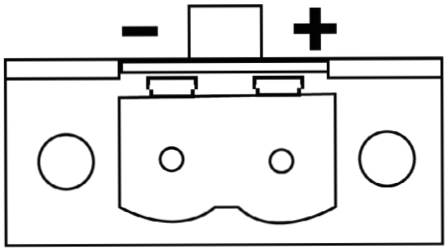

Figure 8 – Power Connections

Connect your DC power cable to the SL-SMT 09F connector block as follows:

Step #1:
Unscrew (from top) or make sure that the screw terminals (square area) are fully open, so you can secure the inserted cables correctly to the loose housing connector (it may already be plugged into the unit as per factory installation).

Step #2:
Insert cables (from front) and screw / secure the cables by turning the screw on top of the housing to secure the cables properly. Check that the cables are firmly in place and do not appear loose or fall out when pulling gently.

CAUTION!

Required polarization verification (for instance -/+ for DC power input) should conform to the markings on the connector area of the unit. Ignoring the markings on the unit or its add-on modules might damage the unit and/or external equipment in which end, warranty will be void.

Step #3:
Plug the housing into the appropriate connector area of the unit and check again that the cables secured conforms to the markings on the connector area of the unit.

Step #4:
Finalize the installation by fasten the screws located in front on each side of the housing connector.

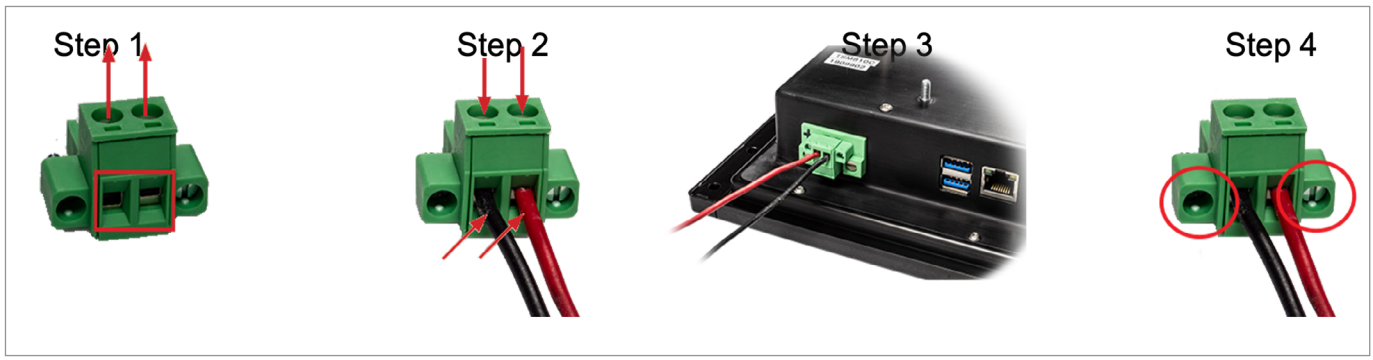

Figure 9 – Attaching Power Cables to Connector

NMEA 2000® Connection

The two NMEA 2000® connectors can be found on the rear panel of the A3419 and A3422. If you are using a single NMEA 2000® network, connect either of the connectors to the NMEA 2000® network. If you are using dual NMEA 2000® networks, connect each NMEA 2000® connector to one of the NMEA 2000® networks. Note that if you are using dual NMEA 2000® networks, the instancing of device and data instance on the network nodes must be unique across both networks. For example, if one network has a device which transmits fluid level data for Fuel Tank instance 0, the other network must not contain a device which transmits fluid level data for Fuel Tank instance 0.

The NMEA 2000® connectors are round five pin male connectors (see Figure 10). You connect the A3419 and A3422 to an NMEA 2000® network using a NMEA 2000® cable (or an NMEA 2000® compatible cable) by connecting the female end of the cable to the A3419 and A3422 (note the key on the male connector and keyway on the female connector). Be sure the cable is connected securely and that the collar on the cable connector is tightened firmly. Connect the other end of the cable (male) to the NMEA 2000® network in the same manner. The A3419 and A3422 is designed such that you can plug or unplug it from an NMEA 2000® network while the power to the network is connected or disconnected. Please follow recommended practices for installing NMEA 2000® network products.

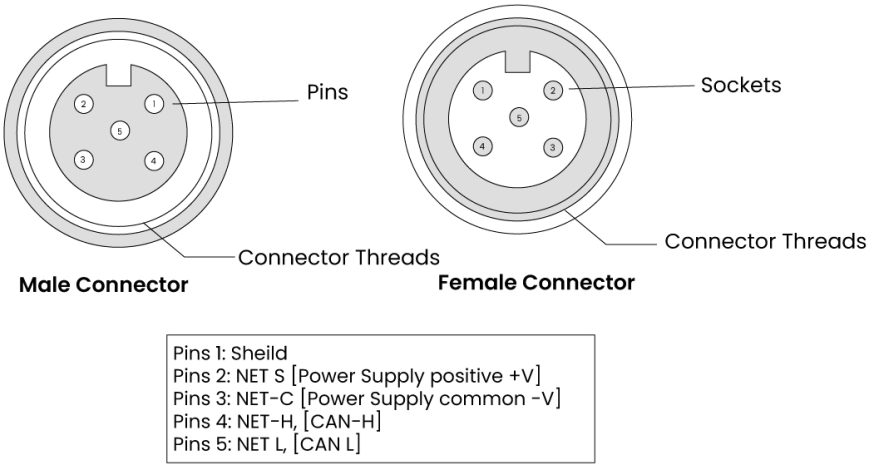

Figure 10 – NMEA 2000® Connector Face Views

Power Sequencing

When the A3419 and A3422 is connected to an appropriate power source, you can use the power switch located at the center of the front panel to turn the A3419 and A3422 on or off.

The A3419 and A3422 can also be switched on and off by applying or removing power through an external switch or breaker. Anytime the power is reapplied to the A3419 and A3422, it will turn on.

If the A3419 and A3422 is turned on, then the switches found on the front panel will be brightly illuminated and the LED will illuminate green. If the TSM810 is turned off, and power is still applied, the front panel switches + and – brightness switches will be dim, the center power switch will be bright, and the LED will illuminate red when the shutdown process is complete.

Manually Entering LAN Connection Information

If you intend to use the Video feature or send e-mails via the Alerts feature, you must ensure that the device can connect to your LAN (local area network). The A3419 and A3422 comes from the factory preconfigured to obtain its LAN connection information from a DHCP (Dynamic Host Control Protocol) server. If your local area network uses a DHCP server, no configuration is necessary, and the A3419 and A3422 should be able to successfully connect to the local area network.

If your local area network does not use DHCP, you must manually enter the LAN connection information into the A3419 and A3422. This is done through the following steps:

NOTE

The LAN Connection is not necessary unless you are using any of the following features:
- Video
- E-mail actions on Alerts

Figure 12 – N2KView® Window with Tabs Displayed

a. Click anywhere inside the N2KView® screen to display the screen tabs as shown in Figure 12 above.

b. Click on the "**Commands & Settings**" tab on the right side of the N2KView® screen to display the Commands & Settings window.

c. Click on the "**Configuration**" button in the Commands & Settings window to display the Configuration dialog. (Certain parameters are password protected by the manufacturer. Contact manufacturer for password)

d. Click on the "**Ethernet**" tab in the Configuration dialog to display the Ethernet dialog.

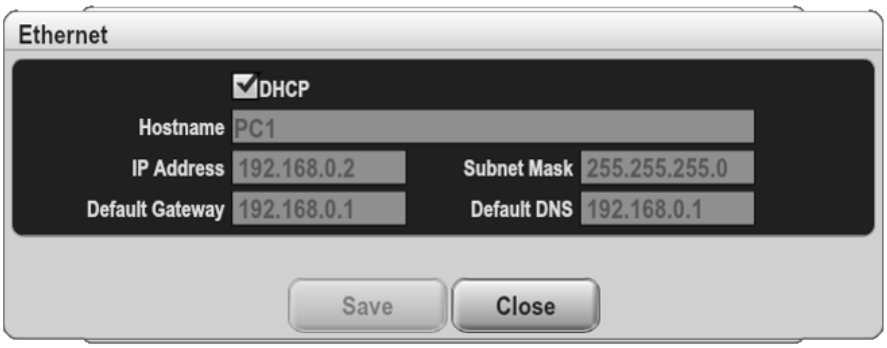

Figure 13 – Ethernet Dialog

e. Uncheck the "**DHCP**" box to indicate that your LAN does not use DHCP.

f. Optionally, in the "**Hostname**" field, enter a hostname for the A3419 and A3422. This is used by the network router.

g. In the "**IP Address**" field, enter the IP address you wish to assign to the A3419 and A3422.

h. In the "**Subnet Mask**" field, enter the net mask value used on your LAN (in most cases, this value will be "255.255.255.0").

i. In the "**Default Gateway**" field, enter the IP address of the default gateway of your LAN.

j. In the "**Default DNS**" field, enter the IP address of a DNS (Dynamic Name Service) Server used on your LAN.

k. Click the "**Save**" button to make these changes permanent and exit the dialog.

Operating Touchscreen

Turning Touchscreen On

To turn on the A3419 and A3422, press the power button, located on the front panel of the A3419 and A3422 for at least one second. The screen brightness buttons backlights will change from dim to bright, and the LED will turn green once the power-on process begins.

Turning Touchscreen Off

To turn the A3419 and A3422 off, use the "Shutdown" administrative tab of the N2KView® software. Alternatively, you can power down the unit by pressing the power button, located on the front panel of the A3419 and A3422 for at least one second. The brightness buttons backlights will change from bright to dim and the LED will turn red once the power-off process is complete.

Adjusting the Screen Brightness on the Touchscreen

Touch the illuminated (-) or (+) symbols underneath the screen to adjust the brilliance/brightness of the displayed image.

Using the Touchscreen

The A3419 and A3422 runs a fully functional and fully licensed version of the N2KView® software. Please refer to the N2KView® User's Manual, included with the A3419 and A3422 on the USB Drive, for detailed operating instructions.

Maintenance

Regular maintenance is important to ensure continued proper operation of the A3419 and A3422. Perform the following tasks periodically:

- Clean the unit with a soft cloth. Do not use chemical cleaners as they may remove paint or markings or may corrode the A3419 and A3422 enclosure or seals. Do not use any cleaners containing acetone, as they will deteriorate the plastic enclosure. Do not spray cleaning liquids directly onto the A3419 and A3422.
- Ensure that the unit is mounted securely and cannot be moved relative to the mounting surface. If the unit is loose, tighten the mounting screws.
- Check the security of the power and network cables connected to the A3419 and A3422 and tighten if necessary.

Troubleshooting

If you notice unexpected operation of the A3419 and A3422, follow the troubleshooting procedures in this section to remedy simple problems.

SYMPTOM	TROUBLESHOOTING PROCEDURE
LED is not illuminated	Check the connection to the power connectors and tighten if necessary. Ensure that power is supplied to the connected power cable.
No activity on the display	Check the connection to the network connectors and tighten if necessary. Repower the unit by unplugging the power cable and then plugging it back in. Carefully watch the display during startup for any messages.
All the data values on the displays are grey or show dashes.	Check that the NMEA 2000® interfaces are correctly connected to the NMEA 2000® network.Check that the NMEA 2000® network is correctly powered up.
Unable to send test emails.	Check that the Ethernet cable is correctly plugged in and connected to a router with Internet Access. Verify the email settings in the Email Setup dialog are correctly spelled.
Other Issues	Please refer to the Troubleshooting section of the N2KView® User's Manual.

If these steps do not solve your problem, please contact technical support.

Warning: There are no user-serviceable components inside the A3419 and A3422. Opening the A3419 and A3422 will expose the sensitive electronic components to adverse environmental conditions that may render the unit inoperative. Please do not open the A3419 and A3422, as this will automatically void the warranty. If service is required, please return the unit to an authorized service location.

Dimensional Specs in. [mm]

8 Inch Touchscreen
A3419

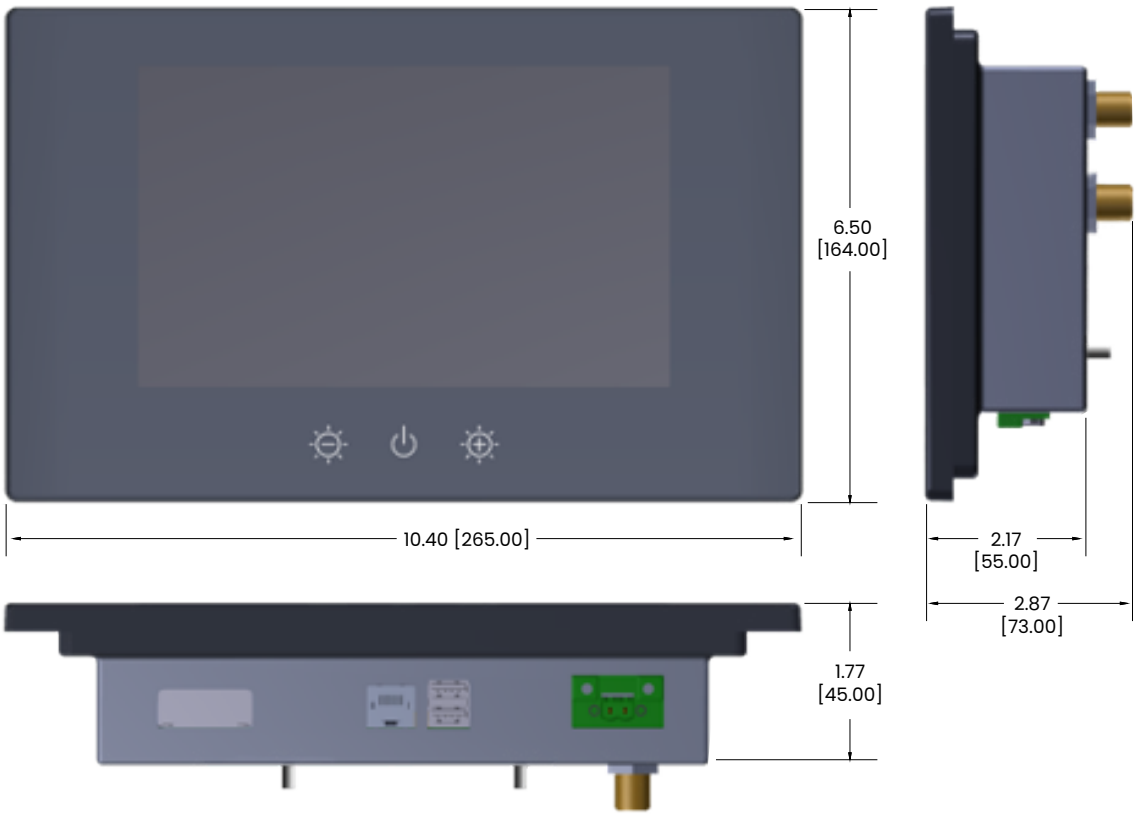

Dimensional Specs in. [mm]

12.1 Inch Touchscreen

A3422

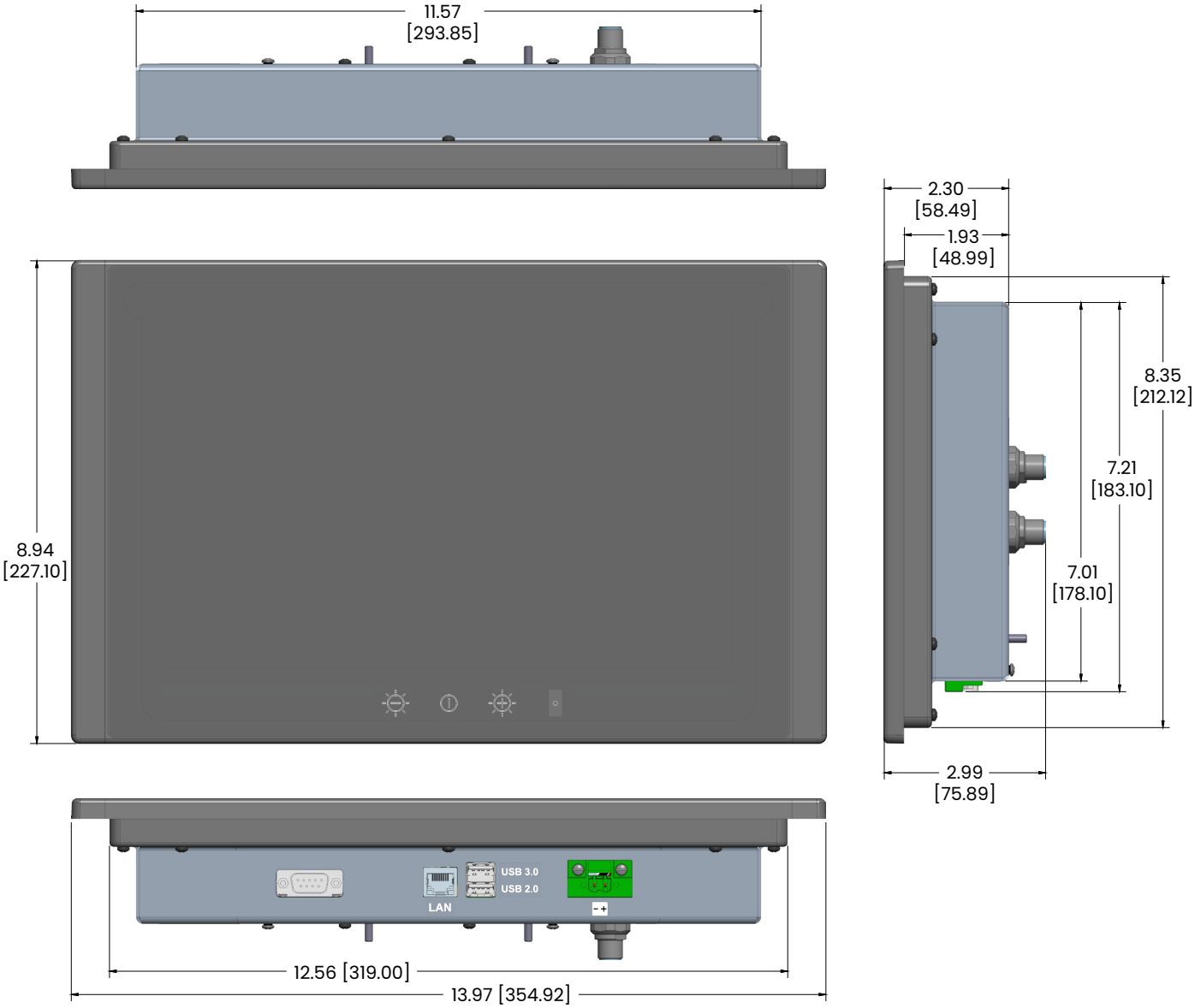

Tech Specs

SPECIFICATIONS

PARAMETER	VALUE	COMMENT
Display Size	8" and 12.1"	LED Backlit LCD with Projected Capacitive Touch Screen
Display Resolution	800x480 (8") 1280x800 (12.1")	WVGA (8") WXGA (12.1")
Display Brightness	1350cd/m2 (8") 1500cd/m2 (12.1")	Optically Bonded
Contrast Ratio	600:1 (8") 700:1 (12.1")	
LCD Color	262K	
Viewing Angle	80° H, 80° V (8") 80° H, 60° V (12.1")	
USB Ports	One USB 2.0, one USB 3.0	
Ethernet Ports	One RJ-45 GbE	For connection to router

APPROVALS

PARAMETER	COMMENT
IEC 60945	Electromagnetic Compliance
FCC Part 15B class A and CE mark	
IC ICES-003 Issue 6	
NMEA 2000®	

ELECTRICAL

PARAMETER	VALUE	COMMENT
Operating Voltage (Dedicated Supply Connection)	10-32 Volts	DC Voltage
Power Consumption (Dedicated Supply Connection)	<10 Watts	Typical
	15 Watts	Maximum
Operating Voltage (NMEA 2000® Connection)	8-32 Volts	DC Voltage
Power Consumption (NMEA 2000® Connection)	50mA	
Load Equivalence Number (LEN)	1	NMEA 2000® Spec. (1 LEN = 50 mA)
Reverse Battery Protection (NMEA 2000® Connection)	Yes	Indefinitely
Load Dump Protection (NMEA 2000® Connection)	Yes	Energy Rated Per SAE J1113

MECHANICAL

PARAMETER	VALUE	COMMENT
Overall Dimensions (DxWxH)	2.87" x 10.4" x 6.5" [73 x 265 x 164mm] (8") 2.98" x 13.97" x 8.94" [75 x 354 x 227mm] (12.1")	
Weight	4.2 lbs [1.9kg] (8") 6.0 lbs [2.7 kg] (12.1")	
Front Panel Material	Glass	
Front Panel Controls	Power, Brightness +/-	
Mounting	VESA mounting 75mm x 75mm	4 x M4x0.07 clinch screws protrude 8.25mm (0.32") from back of unit, washers and nuts required, not supplied by OctoPlex.
	Front mount flush into console with 6 screws	6 x #10 Flat / Countersunk bolts or screws required, not supplied by OctoPlex.

ENVIRONMENTAL

PARAMETER	VALUE
Operating Temperature	-20°C to 55°C (Humidity up to 95%)
Storage Temperature	-30°C to 60°C (Humidity up to 95%)
IP Rating	IP66 Front, IP22 Rear (EN60529)

AC Power Distribution Unit

The AC Power Distribution units provide the boat builder with up to 8, 13 or 19 remotely controlled hydraulic-magnetic circuit breakers in one package that can be mounted in virtually any dry areas of the vessel. AC Circuit breakers are available from 1 to 100 amps and are remotely controlled via external solenoids. Each breaker can also be manually actuated. The AC units utilize a 16 bit microprocessor that controls the on/off function of each circuit breaker and provides interfacing to a dual CAN bus network. The AC unit enclosures are made from white, high strength, injection molded plastic that will provide years of protection.

Product Highlights

(8 Position Unit)

- 50 Amps Maximum Capacity
- Remote Actuation of Breakers
- Dual CAN BUS Communication

(13/19 Position Unit)

- 100 Amps Maximum Capacity
- Remote Actuation of Breakers
- Dual CAN BUS Connection/Communication
- Three Phase Power Capability; 120/208VAC or 230/415VAC

PRODUCTS

PART NUMBER [1]	DESCRIPTION	NUMBER OF POSITION [2]		
		8	13	19
A3000-X-1	AC Power Distribution Unit - 120V (No Main Breaker)	X	X	X
A3000-X-1M	AC Power Distribution Unit - 120V (With Main Breaker)	X	X	X
A3000-X-2	AC Power Distribution Unit - 120/240V (No Main Breaker)	X	X	X
A3000-X-2M	AC Power Distribution Unit - 120/240V (With Main Breaker)	X	X	X
A3000-X-3	AC Power Distribution Unit - 120/208V (No Main Breaker)	N/A	X	X
A3000-X-3M	AC Power Distribution Unit - 120/208V (With Main Breaker)	N/A	X	X
A3000-X-4	AC Power Distribution Unit - 230V Single Pole (No Main Breaker)	X	X	X
A3000-X-4M	AC Power Distribution Unit - 230V Single Pole (With Main Breaker)	X	X	X
A3000-X-5	AC Power Distribution Unit - 230V Double Pole (No Main Breaker)	X	X	X
A3000-X-5M	AC Power Distribution Unit - 230V Double Pole (With Main Breaker)	X	X	X
A3000-X-6	AC Power Distribution Unit - 230/415V (No Main Breaker)	N/A	X	X
A3000-X-6M	AC Power Distribution Unit - 230/415V (With Main Breaker)	N/A	X	X
931-00171-001	AC Breaker Removal Tool			

Notes:
1. "X" designates the number of breaker positions available for that voltage configuration; see Number of Positions Column

Configuration

Configuration of an OctoPlex® AC Unit and its associated functions can be performed running running a licensed version of N2K Analyzer on a computer with a CAN interface. Consult the N2K Analyzer User's Guide for complete details on adjusting configurable parameters. AC box configuration settings are initially loaded and controlled with the N2K Analyzer utility and contained in xml Files. The parameters below can be modified by using the Multi-Function Display.

N2K Analyzer Configuration Parameters

SPECIFICATIONS

PARAMETER	SETTING	DESCRIPTION
Default State	ON, OFF, Last State	Circuit breaker state on network power up
Default Lock State	Locked or Unlocked on Network Power up	Lock state on network power up
State	ON or OFF	Last known state on network power up
Configuration Allowed	YES or NO	Allow user to modify Circuit Breaker via Multi-Function Display
Alarm on Trip	YES or NO	Audible alarm when breaker trips

CAUTION!

When "Default to Last State" is set to "ON" it overrides the "Default State" setting.

Breaker Slot / Official Circuit Relationship

The number of available circuit breakers in an AC Distribution Unit for loads will vary depending on the AC input power type 120V or 230V (Euro Single Phase), 240V or three Phase.

Single Pole breakers: 120V and 230V Euro loads require a single breaker slot.
Double Pole breakers: 240V loads requires two physical breaker slots.
Three Pole breakers: 120/208V and 230/415V requires three physical breaker slots.

The AC Distribution Unit may contain different combinations of breaker; therefore, the total number of supported load circuits in a given unit will vary depending on the load type mix;

AC UNIT TYPE	120V/230V SINGLE POLE	240 DOUBLE POLE	3-PHASE TRIPLE POLE
8 Position	8	4	N/A
13 Position	13	6 (plus 1 SP)	4 (plus 1 SP)
19 Position	19	9 (plus 1 SP)	6 (plus 1 SP)

The Panel Breaker numbers, as identified on the panel cover, start with one at the top. The main breaker (when used) will occupy slots one through three depending on the main breaker configuration, single, double or triple pole.

NOTE

The highest AC Breaker Rating (amps) should be installed in lowest breaker position (i.e. Position 1, 2, etc.) to ensure proper load distribution.
For example: Breaker Positions 1-2 has 100A breaker installed; breaker position 3 has 70A breaker installed; etc.

Breaker Control By Discrete I/O Function

Analog input signals to the System Interface Unit Monitor (SIU) can trigger a Discrete I/O function in the AC processor, which can be used to control the behavior of a Circuit Breaker. Sixteen Discrete I/O's per AC Unit can be programmed. One Discrete I/O can control multiple breakers up to the unit limit. Discrete I/O functions are configured using N2K Analyzer.

Discrete I/O	Description
Off & Lock	Turn AC Breaker OFF and Lock in OFF position
Always Turn On	Turn AC Breaker ON but does not turn breaker OFF
Always Turn Off	Turn AC Breaker OFF but does not turn breaker ON
Toggle On/Off	Toggle the state of the AC Breaker
Discrete Momentary	Turn AC Breaker ON while signal is applied

AC Breaker Assignment Considerations

The relationship between the AC units physical breaker positions, the main breaker type & the load breaker assignment (Single Pole, Double Pole, Three Pole) must be taken into consideration & assigned accordingly to the Multi-Function Display AC Unit configuration. The table below illustrates this relationship.

UNIT BREAKER POSITION	SINGLE POLE	GROUP	LINE	DOUBLE POLE	GROUP	LINE	THREE POLE	GROUP	LINE
1	Main L1	32	L1	Main L1	32	L1	Main L1	32	L1
2	Load 1	1	L1	Main L2	32	L2	Main L2	32	L2
3	Load 2	2	L1	Load 1	1	L1	Main L3	32	L3
4	Load 3	3	L1	Load 2	2	L2	Load 1	1	L1
5	Load 4	4	L1	Load 3	3	L1	Load 2	2	L2
6	Load 5	5	L1	Load 4	4	L2	Load 3	3	L3
7	Load 6	6	L1	Load 5	5	L1	Load 4	4	L1
8	Load 7	7	L1	Load 6	6	L2	Load 5	5	L2
9	Load 8	8	L1	Load 7	7	L1	Load 6	6	L3
10	Load 9	9	L1	Load 8	8	L2	Load 7	7	L1
11	Load 10	10	L1	Load 9	9	L1	Load 8	8	L2
12	Load 11	11	L1	Load 10	10	L2	Load 9	9	L3
13	Load 12	12	L1	Load 11	11	L1	Load 10	10	L1
14	Load 13	13	L1	Load 12	12	L2	Load 11	11	L2
15	Load 14	14	L1	Load 13	13	L1	Load 12	12	L3
16	Load 15	15	L1	Load 14	14	L2	Load 13	13	L1
17	Load 16	16	L1	Load 15	15	L1	Load 14	14	L2
18	Load 17	17	L1	Load 16	16	L2	Load 15	15	L3
19	Load 18	18	L1	Load 17	17	L1	Load 16	16	L1

18 Single Pole slots available

Double Pole uses 2 positions

Single Pole uses 1 position
Double Pole uses 2 positions
Three Pole uses 3 positions

NOTE

If the main breaker is external to box, then loads start at position number 1

AC Main Circuit Breaker Installed - Unit Configurations

There are three distinct AC Distribution Unit configurations depending on the type of line input; each requires different hardware options depending on the input line configuration. This configuration must be determined prior to ordering the AC Units.

1. Single Phase 120VAC or Euro 230VAC
2. Single Phase Dual Line 120/240VAC
3. Three Phase 120/208VAC or 230/415VAC

Single Phase 120VAC or Euro 230VAC: Line Bus Bars 1 and 2 are connected together at the factory using a bus bar jumper.

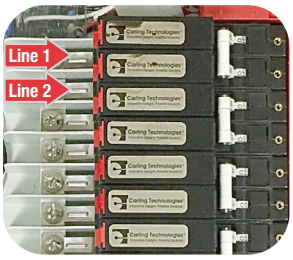

Single Phase Dual Line 120/240VAC: Line Bus Bars 1 and 2 are not tied together at the factory, allowing two legs of 120/240VAC to be brought into the unit for single or double pole circuit breaker installation.

Three Phase 120/208VAC or 230/415VAC: Line Bus Bars 1, 2 and 3 are brought into the box separately allowing for single, double or three pole circuit breaker installation.

AC No Main Circuit Breaker Installed - Unit Configurations

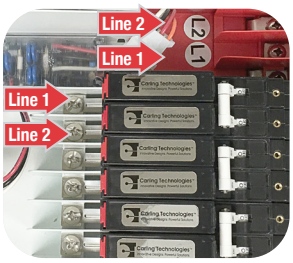

Single Phase Dual Line 120/240VAC: Line Bus Bars 1 and 2 are not tied together at the factory, allowing two legs of 120/240VAC to be brought into the unit for single or double pole circuit breaker installation. Breaker position 1 is line 1, breaker position 2 is line 2, and then they alternate.

Installation

The AC Power Distribution Unit is designed to be installed in an environmentally protected, non-explosive area of the vessel. Take precautions to mount the unit in an area that will be away from direct exposure to water, weather and combustible fumes.

Mounting

These units should be mounted in a location that is accessible for manual/override control and serviceability. **These units must be mounted in vertical position only.** Installations in horizontal position (flat) with breakers facing up or down can compromise the accuracy of the AC circuit breaker function.

AC Main Connections

Depending on configuration, connection points are provided for single 120VAC, Single 240VAC (Euro), dual 120/240VAC or three phase (120/208VAC or 230/415VAC) AC line inputs. Bus bars are provided for AC neutral (White or Blue) and grounding (Green or Green-Yellow) conductors. Main feed wires entering the panel are secured to prevent strain using a clamp provided at the opening on the outside of the panel.

HIGH VOLTAGE!

WARNING!

Lethal voltages are present inside the AC unit. Verify that all AC power is shut off or disconnected before working inside the unit. **Required Torque** for each AC breaker terminal screw is 35 inch-lbs. This torque requirement must be applied to all circuit breaker terminal screws, no exceptions. Failure to properly torque each connection may result in damage to the AC Unit or vessel.

CAUTION!

The installer is responsible for verifying that the wire gauge used for the main power feed is appropriately sized for the loads being fed from the AC unit. The unit is designed to accept up to #1 gauge wire for the main power feed. All personnel performing installation or maintenance work on the AC Unit will need to have a calibrated torque screwdriver in order to verify proper installation of the circuit breakers and associated connections.

AC Branch Circuit Connections

Branch circuit wires enter the AC Power Distribution Unit through the openings at the bottom of the panel. Line conductors are connected to their respective circuit breaker. Neutral and grounding conductors are connected to bus bars provided. Branch wires entering the panel are secured to prevent strain using a screw down “clamp” provided inside of the panel. Circuit breakers are in sequential order from top to bottom. “Tie bars” connecting circuit breaker handles for double and triple pole breakers must be used.

CAN Connections

Two male Micro-C connectors are provided at the bottom left side of the 8 Position or at the top left side of the 13/19 Position unit for connection to the primary and secondary CAN bus via drop cables.

NOTE

Use the shortest drop length possible when connecting the AC Unit to the CAN backbone. NMEA2000® spec is maximum 6 meters for drop cables.

Operation

Depending on the AC Unit power configuration, 120VAC, Single 240VAC (Euro), dual 120/240VAC or three phase (120/208VAC or 230/415VAC), there are two groups of up to three LED's visible through the cover of the AC Power Distribution Unit. These LEDs signify that AC power is present inside the unit ("Power In") and after the Main breaker ("Power Out"). As long as AC power is present, the AC Unit will be recognized by the Multi-Function Display (MFD). When AC power is not present, you will not be able to control the AC circuit breakers.

Standard AC Power Distribution Unit Screen Layouts

The AC Distribution Power Unit screen shows the AC Breaker Label and the current state of the AC Breakers. State of the breaker options include: ON, OFF, Trip, Group Control (ON or OFF), Load Shedding (ON or OFF) or Locked Status (Locked ON or Locked OFF). The user can also scroll forward or backwards to select a specific AC Distribution Power Unit (Example AC Panel #3). For breaker status flags, refer to the appendix page.

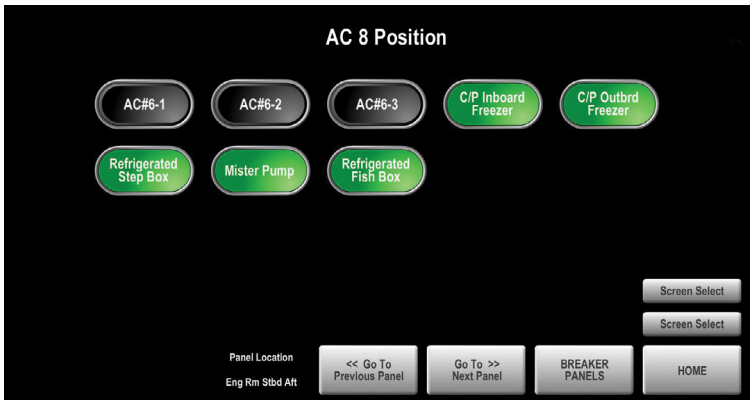

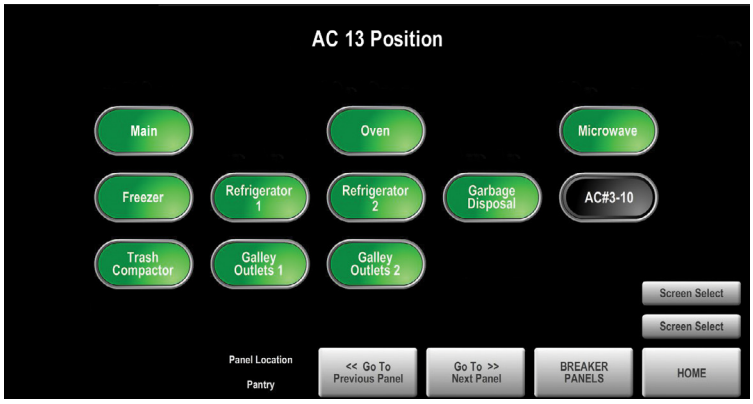

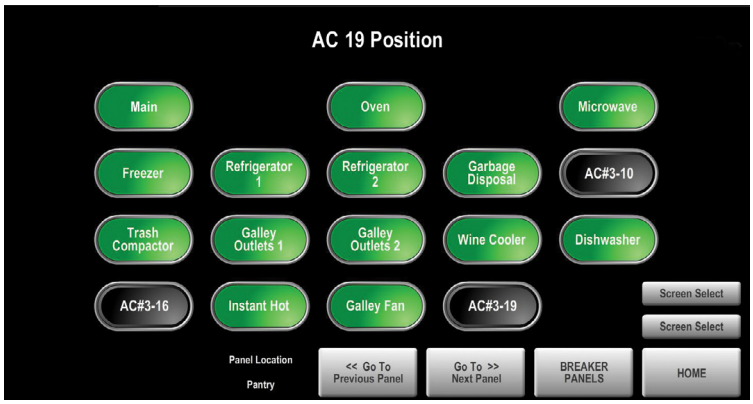

NOTE

This page can vary between installations, as format is determined and/or customizable by the boat builder or owner.

CAN LEDs

The two LEDs labeled “BUS A” and “BUS B” indicate the status of their respective CAN buses, flashing approximately once a second which also serves as a “Heartbeat” indicator from the onboard processor. The possible colors, and their meaning are:

LED COLOR	DESCRIPTION
Flashing Green	Bus is healthy
Flashing Orange	Bus has transmit or receive data errors, but is still usable
Flashing Red	“Bus Off”: Bus is unusable (check CAN cable is connected)

AC Processor Protection Circuit

The AC Distribution Unit contains electronics (TVSS) that protect the AC Processor Board from transient voltages and surges; it does not protect the Line Voltages supplied by the AC breakers. The TVSS is mounted inside the AC Distribution Unit near the AC Processor Board. Two (2) keyed connectors connect the TVSS to the input voltage and to the AC Processor Board. A green indicator LED inside the TVSS is lit when all line voltages are present and the TVSS is operating and protecting the AC Processor Board; the case of the TVSS is clear plastic so that the indicator LED can be seen from any angle. The Indicator LED will turn off if the TVSS is at the end of life (provided that all line voltages are present). A TVSS that is at end of life will not compromise the protection of the AC Unit electronics, but could cut off AC power to the electronics if not replaced before exposure to more transients and surges. It is highly recommended to replace the TVSS as soon as possible when end of life is reached.

Manual Operation

All AC Circuit Breakers can be controlled directly from the AC Power Distribution Unit (bypassing control from the Multi-Function Display(s)). Follow the instructions below to manually control an AC Circuit Breaker:

Step #1:
Remove the cover to the AC Power Distribution Unit by unscrewing the four screws located at each corner of the unit.

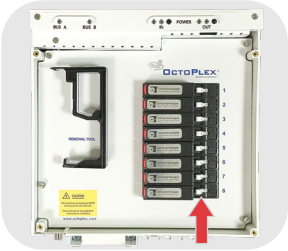

Step #2:
Operate the toggle lever for the desired circuit breaker.
Replace the cover when done.

CAUTION!

When manually controlling AC circuit breakers, any time you turn one to the “OFF” position, the system will consider this a tripped breaker and activate the audible alarm if configured to do so. The system sees this as a trip because the system did not command the breaker “OFF”.

WARNING!

Lethal voltages are present inside the AC Unit. Verify that all AC power is shut off or disconnected before working inside the unit. When a circuit breaker is turned off manually, it can still be controlled via the Multi-Function Display (MFD). This could present a hazard when performing maintenance on a circuit. It is good practice to “lock” a breaker in the “OFF” position from the Multi-Function Display (MFD) when performing any required maintenance on a circuit. Refer to page 11 for Locking Function.

Maintenance

The AC Unit was designed to require minimal, if any, maintenance. The only field serviceable parts in the AC Unit are the Circuit Breakers and Solenoids.

Breaker Replacement

The AC circuit breakers are not interchangeable like the breakers in the DC Units. If an AC breaker value/rating needs to be changed, the AC Power Distribution Unit will need to be disassembled. Below are the steps required for replacing an AC breaker:

WARNING!

Lethal voltages are present inside the AC Unit. Verify that all AC power is shut off or disconnected before working inside the unit.

Step #1:
Turn off the main power feeding the AC Power Distribution Unit at the source. Turn all breakers to OFF position. Do not remove the front panel if the LED's are lit (indicating that AC power is being provided to the panel).

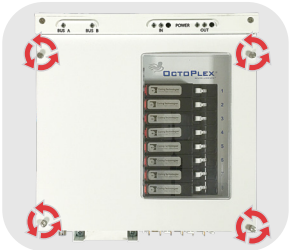

Step #2:
Remove front cover by unscrewing the four slotted-head screws located at the corners. Once the screws are removed, the front cover can be lifted straight up and away.

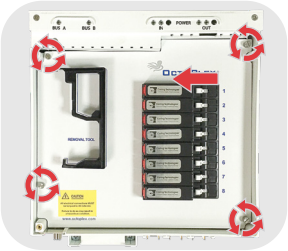

Step #3:
Turn the main AC breaker to the OFF position, if configured.
Remove sub-cover by unscrewing the four slotted-head screws located at the corners. Once the screws are removed, the sub-cover can be lifted straight up and away.

Step #4 (For 8 Position):
Remove the circuit breaker hold down bar by unscrewing the phillips-head screw at the top of the bar. Once the screw is loosened, the hold down bar can be lifted straight up and away.

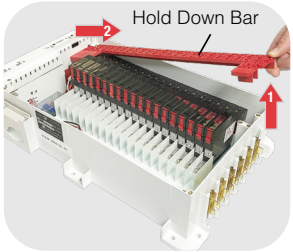

Step #4 (For 13 & 19 Position):
Remove the circuit breaker hold down bar by unscrewing the phillips-head screw at the **bottom** of the bar. Once the screw is loosened, lift the bottom of the bar straight up and pull the bar out of the slot at the top.

Breaker Replacement (continued)

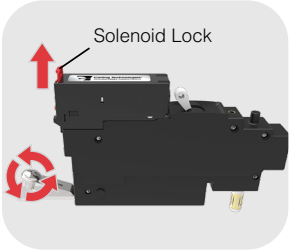

Step #5:
Locate and pull up on the red colored solenoid lock.
Remove load terminal connection by unscrewing the load terminal screw

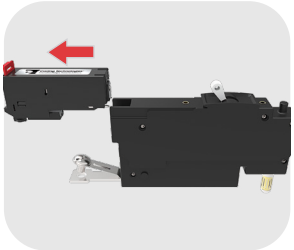

Step #6:
Slide the solenoid away from the circuit breaker as shown.

Step #7:
Position the Removal Tool and insert hook into circuit breaker slot as shown.

Step #8:
Once the Removal Tool hook is inserted in the circuit breaker slot, snap the other side down to secure the connection to the circuit breaker.

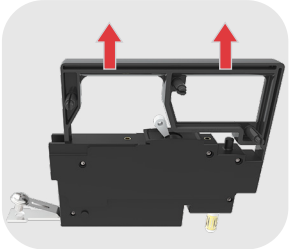

Step #9:
The circuit breaker can now by removed by pulling the Removal Tool straight up and away from the AC enclosure.

Note: The Removal Tool is only used to remove the circuit breaker. You cannot install the breaker with the Removal Tool.

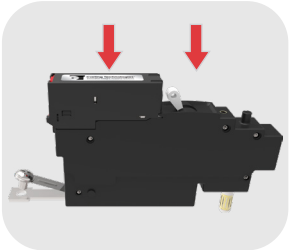

Step #10:
Ensure that the replacement circuit breaker actuator is in the OFF position with solenoid installed and the solenoid tab in the locked position. Position breaker above slot, push straight down until the circuit breaker is in its full seated position.

WARNING!

Make sure main power feeding the AC Power Distribution Unit at the source is OFF.

Breaker Replacement (continued)

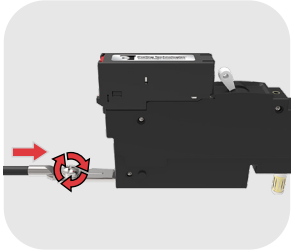

Step #11:
Install load wire ring terminal to circuit breaker as shown.

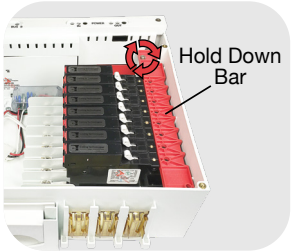

Step #12 (For 8 Position):
Re-Install the circuit breaker hold down bar by placing it as shown and screwing the phillips-head screw at the **top** of the bar.

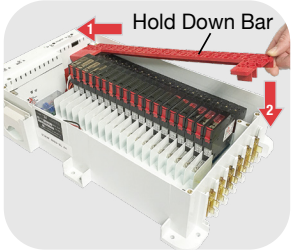

Step #12 (For 13 & 19 Position):
Re-Install the circuit breaker hold down bar by pushing the top of the bar into the slot of the unit and then pushing the **bottom** of the bar down. Screw the phillips-head screw at the bottom of the bar.

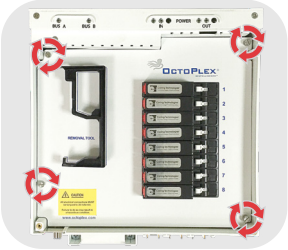

Step #13:
Re-Install the sub-cover by screwing the four slotted-head screws located at the corners. Turn the main AC breaker to the ON position.

Step #14:
Re-Install the front cover by screwing the four slotted-head screws located at the corners. Turn the main power feeding the AC Power Distribution Unit at the source to the ON position.

WARNING!

Required Torque for each AC breaker terminal screw is 35 inch-lbs. This torque requirement must be applied to all circuit breaker terminal screws, no exceptions. Failure to properly torque each connection may result in damage to the AC Unit or vessel.

CAUTION!

All personnel performing installation or maintenance work on the AC Unit will need to have a calibrated torque screwdriver in order to verify proper installation of the circuit breakers and associated connections.

AC Processor Protection Circuit Replacement

Electric Shock RISK

Step #1:
Turn off the main power feeding the AC Power Distribution Unit at the source. Turn all breakers to OFF position. Do not remove the front panel if the LED's are lit (indicating that AC power is being provided to the panel).

Step #2:
Remove front cover by unscrewing the four slotted-head screws located at the corners. Once the screws are removed, the front cover can be lifted straight up and away.

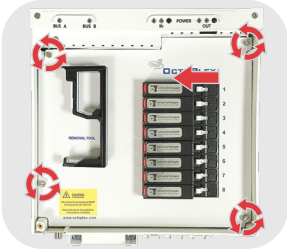

Step #3:
Turn the main AC breaker to the OFF position, if configured.
Remove sub-cover by unscrewing the four slotted-head screws located at the corners. Once the screws are removed, the sub-cover can be lifted straight up and away.

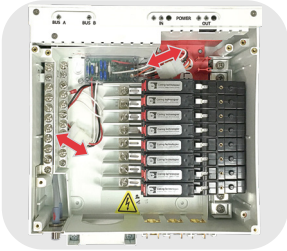

Step #4:
Locate the input and output connectors of the TVSS and pull them apart.

Step #5:
Remove the two (2) screws holding the TVSS to the AC Unit case and remove the old TVSS.

AC Processor Protection Circuit Replacement (continued)

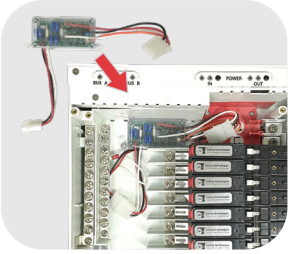

Step #6:
Install new TVSS connecting the input and output connectors and reinstall the two (2) screws.

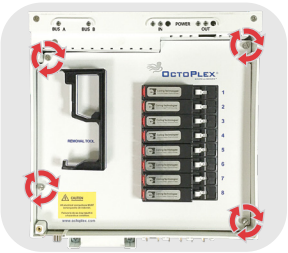

Step #7:
Re-Install the sub-cover by screwing the four slotted-head screws located at the corners. Turn the main AC breaker to the ON position.

Step #8:
Re-Install the front cover by screwing the four slotted-head screws located at the corners. Turn the main power feeding the AC Power Distribution Unit at the source to the ON position.

CAUTION!

All personnel performing installation or maintenance work on the AC Unit will need to have a calibrated torque screwdriver in order to verify proper installation of the circuit breakers and associated connections.

Tech Specs

ELECTRICAL

Operating Voltage, Power Input	
(Single Phase)	120VAC; Euro 230VAC
(Double Phase)	120/240VAC
(Three Phase)	120/208VAC; 230/415 VAC
CAN Bus Operating Voltage	9 VDC – 16 VDC, 15 VDC Nominal
Load Equivalence Number (LEN)	2

MECHANICAL

Dimensions	12.36" X 11.63" X 4.98"
Dimensions	20.66" X 13.39" X 4.98"
CAN Bus Connectors	Two (2) Micro-C Male
CAN A Bus LED Indicator	Green / Red
CAN B Bus LED Indicator	Green / Red
MAIN Power In Indicator	Green (3)
MAIN Power Out Indicator	Green (3)
8 Position Mounting	4 each
19 Position Mounting	10 each
Orientation	Vertical Position (not flat)

CERTIFICATIONS

NMEA 2000	Category B
Lloyd's Register	Lloyd's Type Approved, Test Specification #1, Env 2
CE	**IEC 60533** Electrical and Electronic Installations in Ships **IEC 60945** Maritime Navigation and Radio Communication Equipment and Systems

ENVIRONMENTAL

Radiated, RF Field Immunity	IEC-61000-4-3
Electrical Fast Transient/Burst Immunity	IEC 61000-4-4
Voltage Surge Immunity	IEC 61000-4-5
Conducted, Immunity	IEC 61000-4-6
Conducted Emissions	IEC 60945
Voltage Variation Immunity	IEC 61000-4-11
Conducted LF Immunity	IEC 61000-4-16
ESD Immunity	IEC-61000-4-2
Insulation Resistance	IEC-60092-504
Operating Temperature	-40°C to +55°C
Storage Temperature	-40°C to +55°C
Vibration	IEC-60068-2-6 Test Fc
Temperature Cycle	IEC 60945
Humidity	IEC-60068-2-30 Test Db
Corrosion	IEC 60945
Weight with breakers	A3000-08: 16 lbs. (7.25 kg) A3000-13: 22 lbs. (9.98 kg) A3000-19: 29 lbs. (13.15 kg)

Dimensional Specs in. [mm]

8 Circuit AC Power Distribution Unit

A3000-08-[ ]

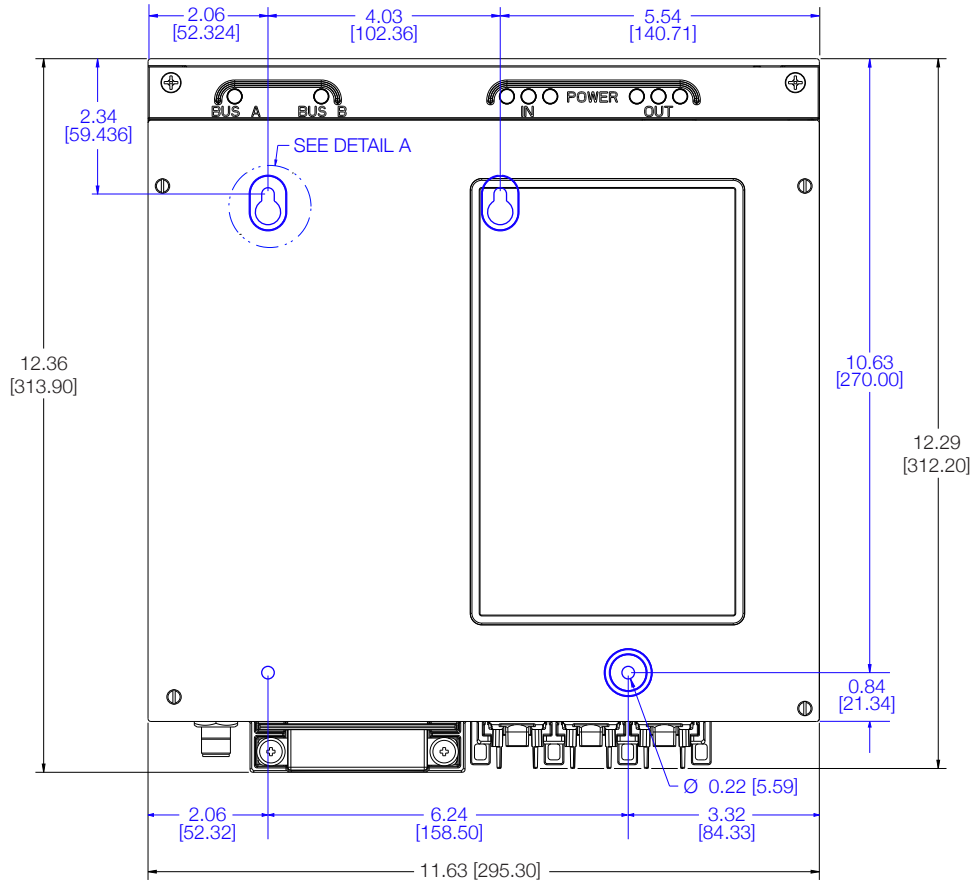

Mounting Dimensions shown in Blue represented underneath cover.

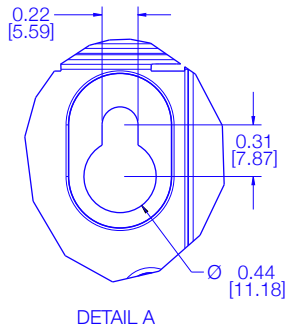

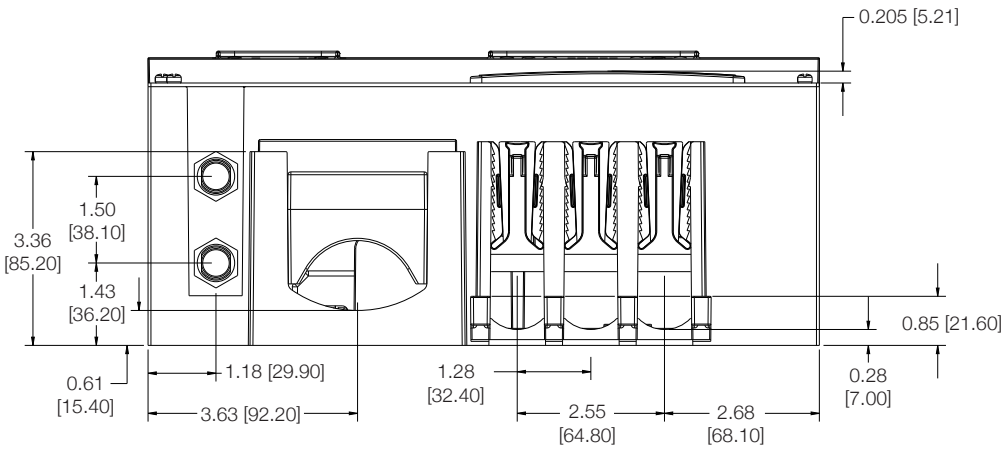

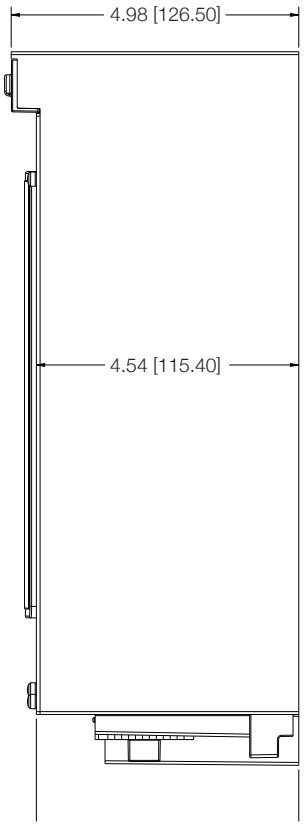

Dimensional Specs in. [mm]

13 Circuit AC Power Distribution Unit
A3000-13-[ ]

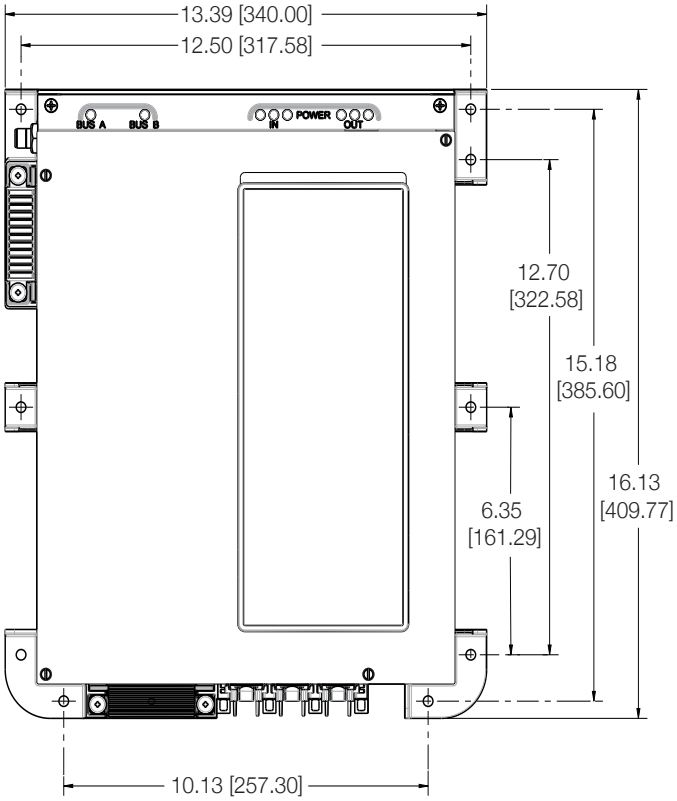

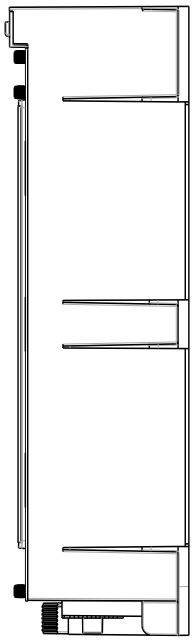

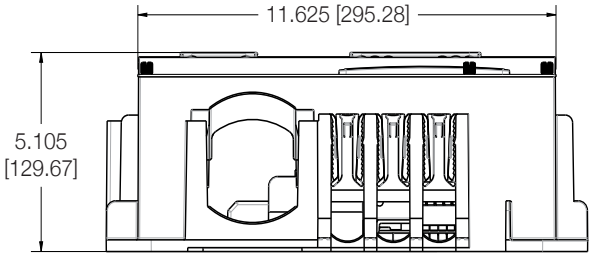

Dimensional Specs in. [mm]

19 Circuit AC Power Distribution Unit

A3000-19-[ ]

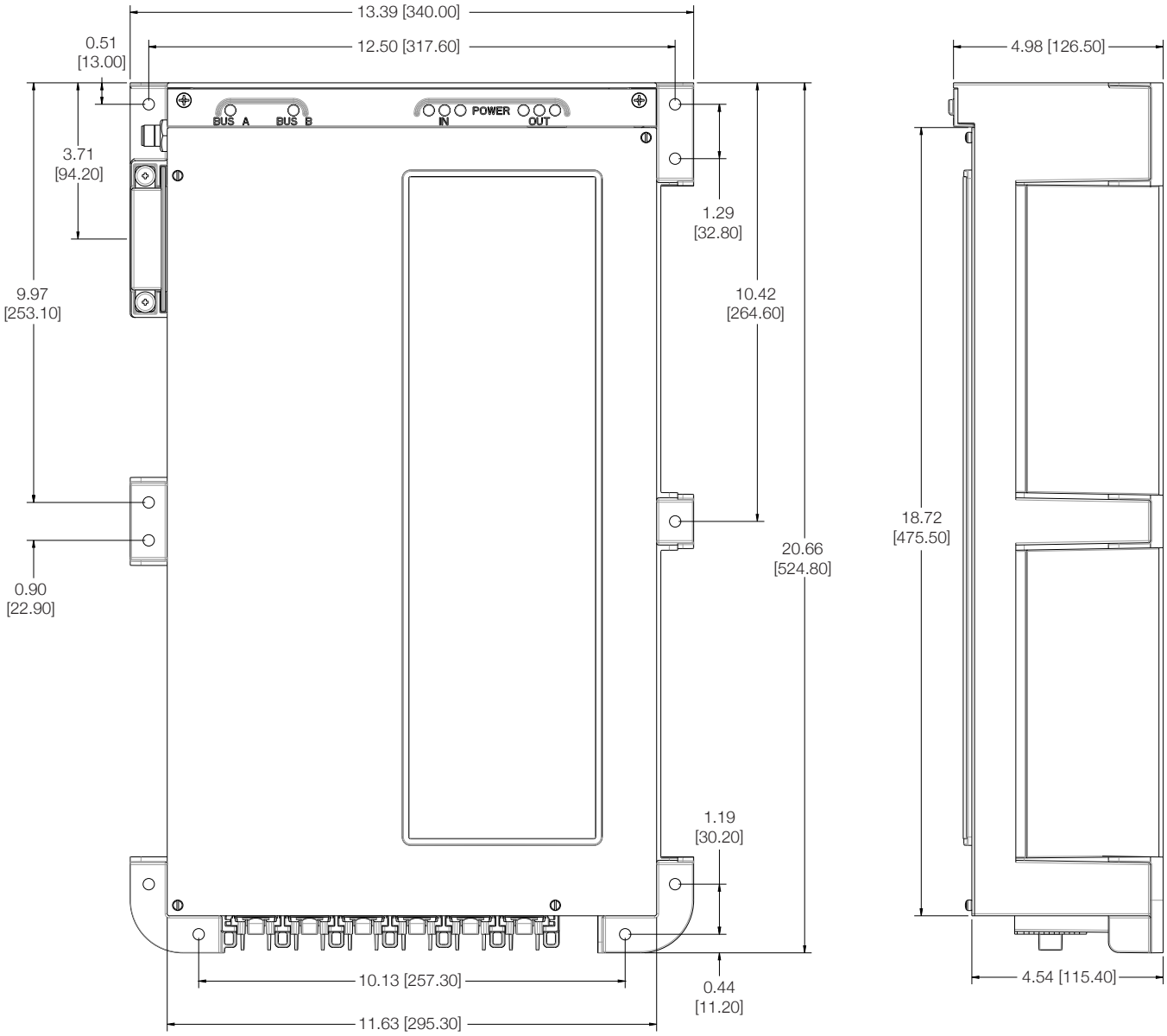

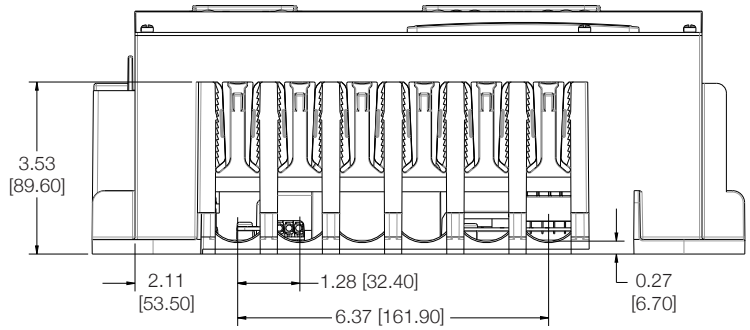

DC Power Distribution Unit

The eight and sixteen DC Power Distribution units are multiprocessor based design rated for up to 100 Amps max. The Electronic Circuit Breakers (ECBs) can be configured to provide protection for DC loads up to 30 Amps. These units contain two host processors for communicating with ECBs and also CAN networks.

Product Highlights

(8 Position Unit)

- Eight ECB's rated at up to 30 Amps
- Dual CAN BUS Communication

(16 Position Unit)

- Eight ECB's rated at up to 30 Amps
- Eight ECB's rated at up to 15 Amps
- Dual CAN BUS Communication

PRODUCTS

PART NUMBER	DESCRIPTION
A3650	DC Power Distribution Unit, 8 Position
A3655	DC Power Distribution Unit, 16 Position
A1660	DC, Electronic Circuit Breaker (ECB)
A1930	DC Bypass Module
A1935	DC Power Isolator, 2 position
A1940	DC Power Isolator, 10 position

Default (Power Up) Behavior:

PARAMETER	SETTING	DESCRIPTION
Default State	ON or OFF	ECB state on device power up
Default Lock State	ON or OFF	Lock state on device power up
Current Setting	0 - 15/30A	ECB selected load rating
Default Dim %	0 - 100%	% of DIM on power up
Trip Delay	0 - 750ms	Trip delay
Inrush Delay	0 - 1500ms	Inrush delay
Factory Current Rating	0 - 15/30A	Max allowed ECB setting
Dimming Allowed	YES or NO	Enable / Disable
Configuration Allowed	YES or NO	Configuration via Multi-Function Display

Configuration

Configuration of an OctoPlex® DC Unit and its associated ECBs can be performed via N2K Analyzer configuration software. A licensed copy of N2K Analyzer provides access to all configurable aspects of a DC Unit and its ECB's.

CAUTION!

The Factory Current Rating is the maximum allowed ECB trip setting as determined by the boat builder and/or installation (example: load requirements / wire gauge)

Inrush & Trip Delays

Inrush Delays are commonly used for devices with high inrush loads during startup such as pumps. The configured setting (in milliseconds) is the time period that the load current is allowed to exceed the programmed current limit. Inrush Delay is typically used with loads that are powered ON/OFF via the ECB.

Trip Delay is associated with loads that are powered ON/OFF via a mechanical switch inline after the ECB (ECB is always ON and supplies power to the switch). The configured setting (in milliseconds) is the time period that the load current is allowed to exceed the programmed current limit.

Automatic ECB Control by Flash Function

The Flash Function allows control of an ECB to be periodic. Common uses of this function include controlling a Fog Horn, automatically turning off a Head Fan or light after a set period of time, etc. Three parameters dictate the behavior of the circuit and are set via the N2K Analyzer utility. A maximum of 15 flash table entries may be defined.

Flash On Time	Duration of time the circuit is ON
Flash Off Time	Duration of time the circuit is OFF
Number of Cycles	Number of times to repeat the cycle 0 - 255, 0 = forever

Automatic ECB Control by Discrete I/O Function

When a System Interface Unit Monitor (SIU) is part of the installation, input signals to the SIU, it can be configured to control the behavior of the ECB's. 16 Discrete I/O's per DC Unit (both 8 and 16 positions) can be programmed. One Discrete I/O can control multiple ECB's up to the unit limit. The Discrete I/O state is maintained independent of any ECB state. Therefore, if an ECB is being controlled from multiple input signals (DIO's) an "out of state" situation is possible when input signals are switched. Example: two wall switches are controlling the same light (ECB) depending on the state of the signal a second touch of the switch may be required to obtain the desired action.

DISCRETE I/O	DESCRIPTION
Always Turn On	Turn ECB on
Always Turn Off	Turn ECB off
Toggle ON/OFF	Toggle ECB state
Turn Off With Lock	Turns circuit off and locks it in off position
Brighten	Increase light intensity (voltage increases in 5% increments per button actuation)
DIM	Decrease light intensity (voltage decreases in 5% increments per button actuation)
Flash	Refers button actuation to specific flash table assigned to that button
Unlock	Unlocks ECB (state does not change)
One Button Smooth High-to-Low	Single press changes ECB state. Press and hold wall switch to turn ON; hold for High to Low voltage decrease (5% increments). Continuing to hold will reset to 100% intensity and repeat.
One Button Smooth Low-to-High	Single press changes ECB state. Press and hold wall switch to turn ON; hold for Low to High voltage increase (5% increments). Continuing to hold will reset to 5% intensity and repeat.
Smooth Scroll	Momentary touch turns ECB ON only; continuing to hold scrolls UP and DOWN (last known state is retained).
One Button Smooth Scroll	Momentary touch changes ECB state; continuing to hold scrolls UP and DOWN (last known state is retained).
Discrete Momentary	Turn ECB ON as long as signal is present (Momentary ON/OFF Button only)

A DC Electronic Circuit Breaker (ECB – 16) provides power to an incandescent lamp. The lamp is controlled via a momentary wall switch tied to an SIU input. The system is configured to allow this particular SIU input to send a message to the ECB for on/off and dim.

1. The wall switch is pressed for On/Off or pressed and held for On/Dim.
2. The SIU input receives a ground signal when the wall switch is depressed.
3. The SIU converts the analog ground signal to an NMEA 2000 PGN message which is broadcast over the network.
4. A DC Unit configured to listen for the SIU Output Pin message receives the PGN and triggers a configured internal Discrete I/O (DIO) function to control the ECB/Circuit.
5. Multi-Function Display receives the ECB status change and updates the breaker button accordingly.
6. Pulse Width Modulation (Dimming Function) can also be used to control fan speeds and multi speed devices.

LED Configuration & Control

LED lighting control (On/Off/Dimming) is supported by both the OctoPlex Multi-Function Display and/or analog switches when properly wired and interfaced to a configured OctoPlex SIU.

CAUTION!

The ECB being used as a dimming module will provide an active high output at full battery voltage to the LED control module. Verify that the LED control module can accept this type of input prior to use. When an ECB is configured to provide a PWM output (dimming) the PWM frequency is 100HZ.

Installation

The DC Power Distribution Unit is designed to be installed in an environmentally protected, non-explosive area of the vessel. Take precautions to mount the unit in an area that will be away from direct exposure to water, weather and combustible fumes.

Mounting

These units should be mounted in a location that is accessible for manual/override control and serviceability.

Power Input Connections

Input studs are provided for DC positive feed and negative return wires. A DC negative bus bar is provided for negative branch circuit wires. The negative bus bar is connected to the DC negative return stud.

When tightening power lug use wrench to secure backing nut and torque main nut to 105 in/lbs.

CAUTION!

Negative Bus Bar screws are torqued to 20 to 25 inch pounds.

WARNING!

Turn off DC Power prior to working with main DC power input stud. Verify that main DC power to the Unit is off.

CAUTION!

All power input connections should be tightened securely to ensure a good connection.
All power feeds should be protected by an appropriately sized fuse or circuit breaker located at the power source.

Power Output Connections

The mating connectors required to interface the loads to the DC Unit are: Deutsch HDP26-18-8PN. Two connectors are required for 16 position panels. One connector is required for 8 position Unit. Connectors can accommodate 10 to 16 AWG wire depending on the terminal selected.

WIRE GAUGE	CONTACT TYPE	DEUTSCH PART NUMBER
14 to 18	Stamped/Formed	1060-16-0122
12 to 14	Solid	0460-204-12141
12 to 14	Stamped/Formed	1060-12-0166
10	Stamped/Formed	1060-12-0222

CAUTION!

The recommended crimp tool for the solid contact is HDT-48-00. Refer to www.laddinc.com/product/?sku=HDT-48-00 for proper use and instructions on using this tool. The recommended crimp tool for the stamped contacts is, Deutsch DTT-12-00. Refer to www.laddinc.com/product/?sku=DTT-12-00 for proper use and instruction on using this tool.

Depending on the contact type selected, any gauge wire from 10 to 16 can be used to connect the loads to the DC Unit. Verify that the wire gauge, as well as, the ECB setting selected is appropriate for the load including a safety factor.

Power Connector Pin Out

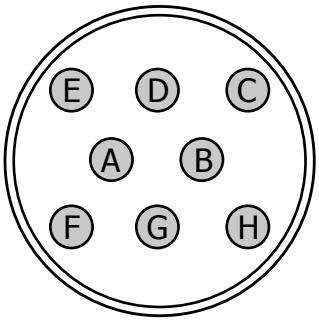

DEUTSCH HDP26-18-8PN			
8-Position Panel		16-Position Panel	
J1-G	Breaker 1	J2-F	Breaker 9
J1-F	Breaker 2	J2-A	Breaker 10
J1-A	Breaker 3	J2-E	Breaker 11
J1-E	Breaker 4	J2-D	Breaker 12
J1-D	Breaker 5	J2-C	Breaker 13
J1-C	Breaker 6	J2-B	Breaker 14
J1-B	Breaker 7	J2-H	Breaker 15
J1-H	Breaker 8	J2-G	Breaker 16

*** Please note the difference between J1 & J2 connections**

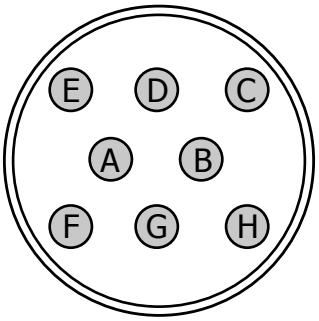

WARNING!

Back feeding power into the DC Unit through the power output connectors can occur if external power is applied to an output load pin. This condition will be flagged as an ECB Abnormal High error and must be corrected. In this situation power will be live in the Unit even if the main breaker inside the unit is turned OFF. Once the cause for the back feed is resolved, the DC Unit will need to be reset to allow the affected ECB to come back on line.

CAN Connections

Two male Micro-C connectors are provided on the front of the DC Power Distribution Unit for connection to the primary and secondary CAN bus via drop cables.

NOTE

Use the shortest drop length possible when connecting the DC Unit to the CAN backbone. NMEA 2000 spec is maximum 6 meters for drop cables.

Operation

There are three LED's visible through the cover of the DC Power Distribution Unit. The left and right LED's indicate that DC power is available on the primary and secondary CAN network. The middle LED indicates that the unit is receiving main external DC power. If the DC Power Distribution unit is not receiving power, the Touch Screen Display(s) will not be able to control the ECB's.

ECB Operation

Each ECB inside of the DC Power Distribution unit has two LED's, one red and one green. The status of each ECB can be determined by which LED is illuminated or blinking as indicated below:

LED INDICATIONS	
Steady Green	ECB is On with a load
Blinking Green	ECB is On with no load
Steady Red	ECB is tripped
Blinking Red	ECB detected error
Steady Red, Steady Green	ECB error Refer to ECB Status Below
No Lights	ECB is Off

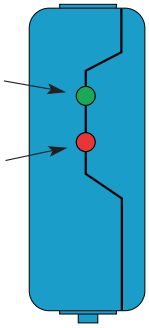

Any other indication represents a faulty condition, requiring the ECB to be replaced.

ECB Status

ECB Status can be viewed on the Multi-Function Display via Breaker Status Hot Button. The following table provides a list of status messages reported by each ECB.

STATUS	DESCRIPTION
Tripped	The ECB has tripped from an circuit overload
Open Load	The ECB is on but the circuit is not drawing current
Short Load	The ECB tripped based on a detected short circuit
Fuse Blown	The ECB slot fuse has opened
Fuse Failed	Fuse failed to open
Access Error	Internal ECB address error
Communication Error	ECB has lost communication with the DC processor
Abnormal High	ECB is OFF but voltage is present at the output
Abnormal Low	Reserved for future use.
Disable	Internal ECB A/D Error
ECB Model	Current ECB hardware configuration
ECB Version	Turn ECB ON as long as signal is present (Momentary ON/OFF Button only)

CAUTION!

Detected errors require that the power to the DC Unit be cycled in order to clear the error. This can be done via the main breaker inside the DC Unit or by cycling the DC power feeding the DC Unit. A shorted load indication may result from an abnormal low voltage being fed to the DC Unit power input. Each ECB is protected by a fuse, either 15 or 30 amps, depending on the position of the ECB. 1-8 are 30A and 9-16 are 15A. See Fuse Replacement section for details. Abnormal High (back feed) occurs when the ECB is in the OFF state but detects voltage on its output. Common causes are a failed external blocking diode (bilge pump etc) or wiring issue.

ECB Error

In the event that a breaker indicator shows an "error" or a "tripped" condition, a more detailed description of this breaker status may be viewed as follows:

Press the Breaker Status button in the lower right corner of the page (1). This will show a sub-page called "Switch/Breaker Status" (see screenshot).

Press the breaker object in question (2) followed by the Get Status button (3). This will show a dialog box with a more detailed description of the breaker status, in addition to all of the available configuration parameters.

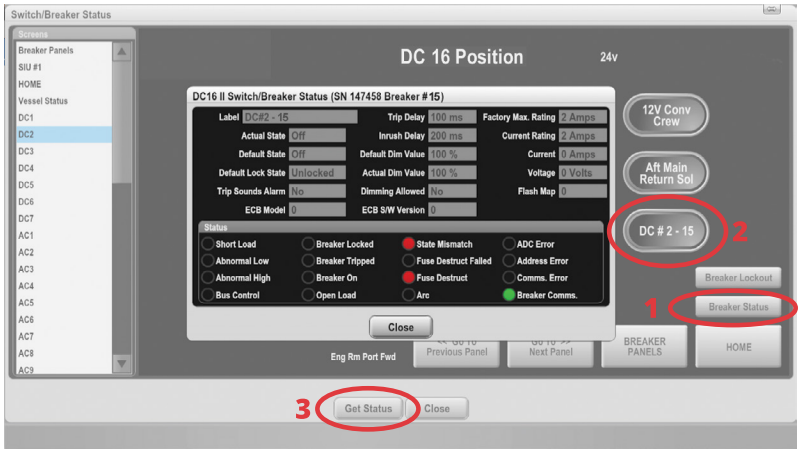

Standard DC Power Distribution Unit Screen Layouts

The DC Power Distribution Unit screen shows the DC Breaker Label and the current state of the DC Breakers. State of the breaker options include: ON, OFF, Trip, Group Control (ON or OFF), or Locked Status (Locked ON or Locked OFF). The user can also scroll forward or backwards to select a specific DC Distribution Power Unit (Example DC Panel #1).

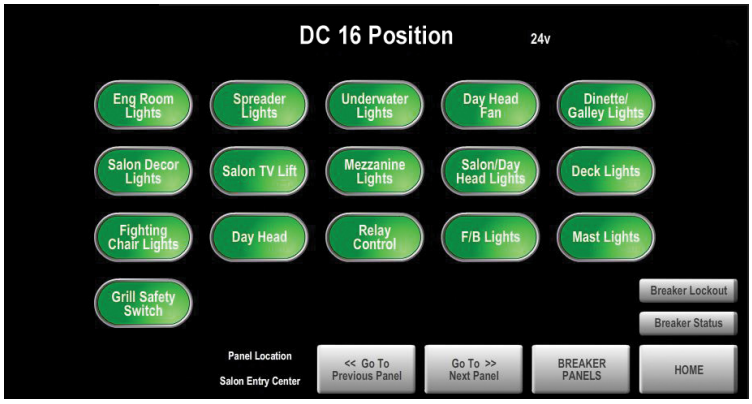

NOTE

This page can vary between installations, as format is determined and/or customizable by the boat builder or owner.

Manual Operation / Overrides

All ECB's can be controlled directly from the DC Power Distribution Unit (overriding/bypassing network control from the Multi-Function Display(s)). If it's installed upright (all connectors on the bottom), the main breaker is in the lower left corner of the Unit. Follow the instructions below for using the DC Power Distribution Unit in override mode:

NOTE

Switch / Breaker buttons will appear as Active, with the words "Local Override".

Step #1:
Remove cover to DC Power Distribution Unit.

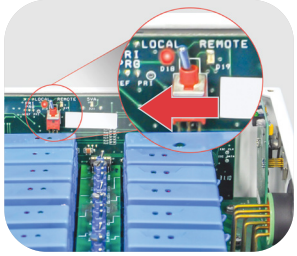

Step #2:
Place the toggle switch located on the board along the left side of the panel to the up position. A Red LED will light up indicating that the panel is in local or "override" mode.

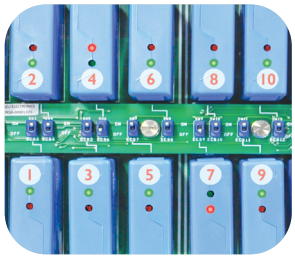

Step #3:
Individual toggles (either 8 or 16) are located in between the two rows of ECB's. They are in sequential order with 1 being on the left and 8 or 16 being on the right. Toggles should be in the up position to turn an ECB on and down to turn an ECB off.

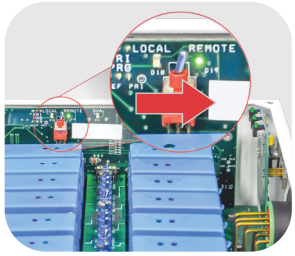

Step #4:
To return the DC Power Distribution Unit to its normal mode so that ECB's can be controlled via the Multi-Function Display(s), place the toggle located on the board along the right side of the panel in the down position. The red LED will go out and a green LED will light indicating the DC Unit is now in remote mode and can be controlled by the Multi-Function Display.

Maintenance

The DC Unit was designed to require minimal maintenance. The only field serviceable parts in the DC Unit are the ECBs and the fuses. It is recommended that all connections are checked on a regular basis.

ECB Replacement

With the cover removed, the inside of the DC Power Distribution Unit can be accessed. If it's installed upright (all connectors on the bottom), the main breaker is in the lower left corner of the unit. This traditional breaker (100A) will disconnect all power to the unit. To remove or replace an ECB follow the below instructions:

WARNING!

The power input stud will still have DC power.

Step #1:
Remove cover to DC Power Distribution Unit.

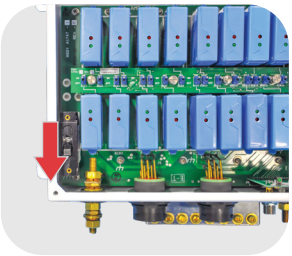

Step #2:
Turn off the Main Breaker (lower left corner of the unit) to the DC Power Distribution Unit.

WARNING!

Verify that the middle LED (power present) is OFF before proceeding or damage to the unit may occur.

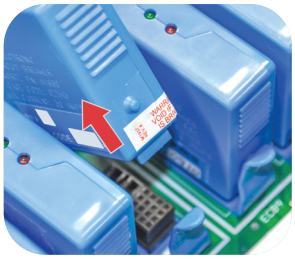

Step #3:
Pull the tab away from the base of the ECB while pulling the ECB away from the board it is mounted to. The tabs securing the ECB's are at the base of each ECB towards the outside of the unit. (On the top row of ECB's the tab is on top, on the bottom row of ECB's the tab is on the bottom.)

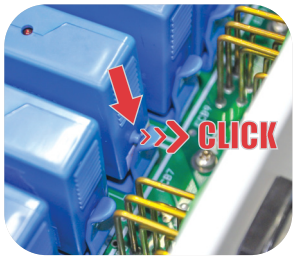

Step #4:
Install an ECB into the DC Power Distribution Unit by simply pushing the ECB into the board by lining up the pins with the connector on the ECB. A soft "click" will be heard when the ECB is properly "locked" into position.

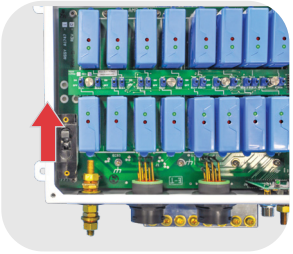

Step #5:
Turn the main breaker to the unit back to the on position.
Re-install cover.

Fuse Replacement

With the cover removed, the inside of the DC Power Distribution Unit can be accessed. If it's installed upright (all connectors on the bottom), the main breaker is in the lower left corner of the unit. This traditional breaker (100A) will disconnect all power to the unit. Follow instructions below for Backup Fuse Replacement.

WARNING!

The power input stud will still have DC power.

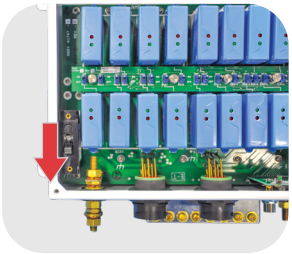

Step #1:

Turn off the Main Breaker (lower left corner of the unit) to the DC Power Distribution Unit.

WARNING!

Verify that the middle LED (power present) is OFF before proceeding or damage to the unit may occur.

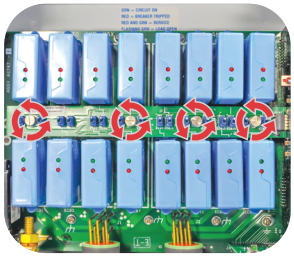

Step #2:

Loosen the thumbscrews on the small board between the two rows of ECB's which contain the manual override toggle switches. (It may be easier to access the screws if ECB's are removed from the unit. Follow "ECB Replacement" steps on page 25 for ECB Removal.)

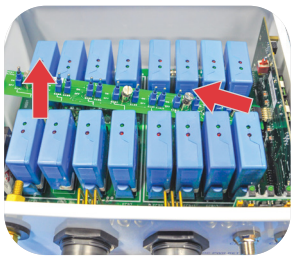

Step #3:

When all of the screws are loosened, lift and pull the board away from the vertically mounted board located on the right-hand side of the unit. The board with the switches should come loose and allow access to the backup fuses.

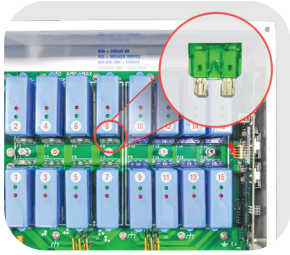

Step #4:

In 16-position units, the left 8 ECB positions (#1-8) are protected by a 30A fuse, while the remaining 8 (#9-16) are protected by a 15A fuse. In 8-position units, all ECB's are protected by 30A fuses. Fuses can simply be pulled out and replaced with the same type (ATO automotive fuses) and value.

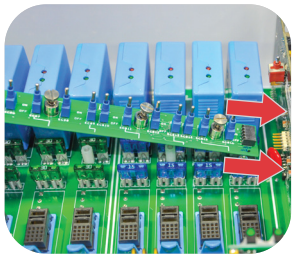

Step #5:

After proper fuses are installed, replace the board with the toggles by lining up the pins on the board along the side of the unit with the connector on the vertically mounted board on the right side of the unit. After the pins are lined up and the board is inserted properly the thumbscrews can be re-tightened and the ECB's can be replaced. Replace any ECB's, which were removed in the process.

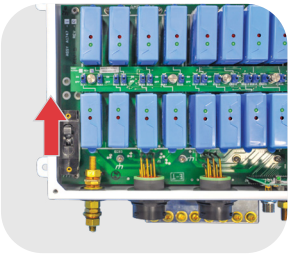

Step #6:

Turn the main breaker to the unit back to the ON position. The red and green LED's should no longer be lit at the same time for the ECB position with the replaced fuse.

CAUTION!

If the red and green LED's continue to illuminate after replacing the backup fuse using the above procedure, the ECB is faulty and should be replaced.

Tech Specs

ELECTRICAL

Power Input (DC Voltage)	10 VDC – 32VDC
Power Input (Max Current)	100 Amps
CAN Bus Output Voltage	9 VDC – 16 VDC, 15 VDC Nominal
Load Equivalence Number (LEN)	1

MECHANICAL

Dimensions	10.81” x 12.62” x 4.93”
CAN Bus Connectors	Two (2) Micro-C Male
CAN A Bus LED Indicator	Green
CAN B Bus LED Indicator	Green
MAIN Power Indicator	Green
Input Power Connection	5/16-18” Stud
Main Power Return Connection	5/16-18” Thread
Load power Return Bus Bar (Removable)	8 each 10-32 screws
Mounting	4 each 4x0.31 for 1/4” mounting hardware
Orientation	N/A

CERTIFICATIONS

NMEA 2000	Category B
Lloyd’s Register	Lloyd’s Type Approved, Test Specification #1, Env 2
CE	**IEC 60533** Electrical and Electronic Installations in Ships **IEC 60945** Maritime Navigation and Radio Communication Equipment and Systems

ENVIRONMENTAL

Radiated, RF Field Immunity	IEC-61000-4-3
Electrical Fast Transient/Burst Immunity	IEC 61000-4-4
Voltage Surge Immunity	IEC 61000-4-5
Conducted, Immunity	IEC 61000-4-6
Conducted Emissions	IEC 60945
Voltage Variation Immunity	IEC 61000-4-11
Conducted LF Immunity	IEC 61000-4-16
ESD Immunity	IEC-61000-4-2
Insulation Resistance	IEC-60092-504
Operating Temperature	-40°C to +55°C
Storage Temperature	-40°C to +55°C
Vibration	IEC-60068-2-6 Test Fc
Temperature Cycle	IEC 60945
Humidity	IEC-60068-2-30 Test Db
Corrosion	IEC 60945
Weight with breakers	A3650: 5.5 lbs. (2.49 kg) A3655: 8.25 lbs. (3.74 kg)

Dimensional Specs in. [mm]

8 Circuit DC Power Distribution Unit
A3650

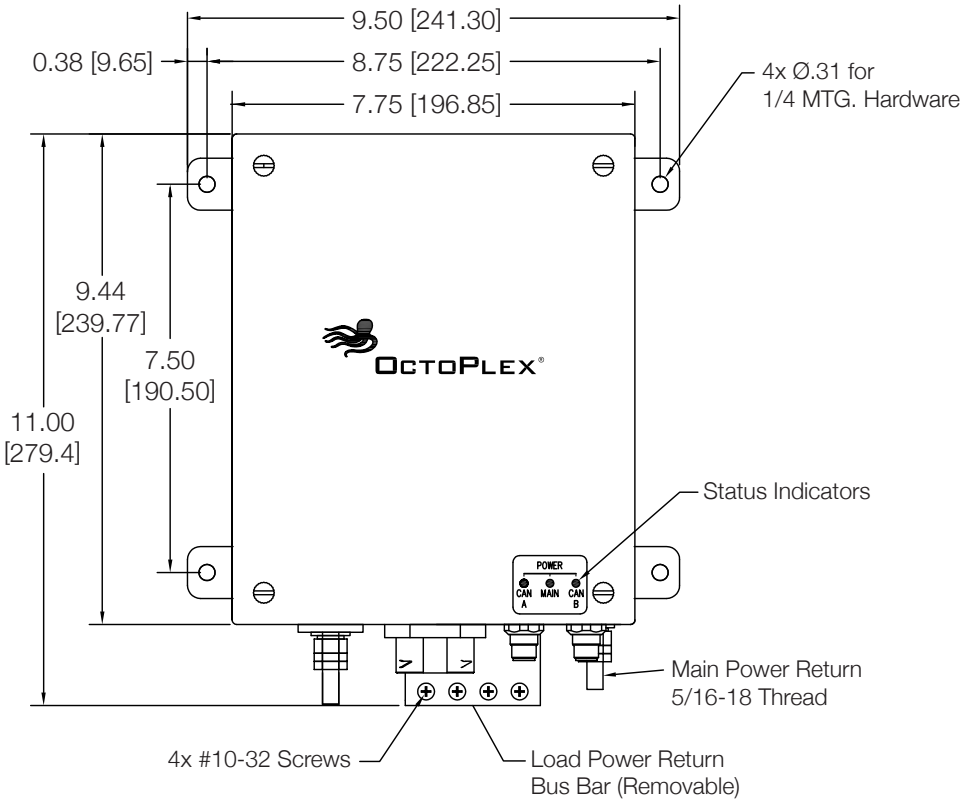

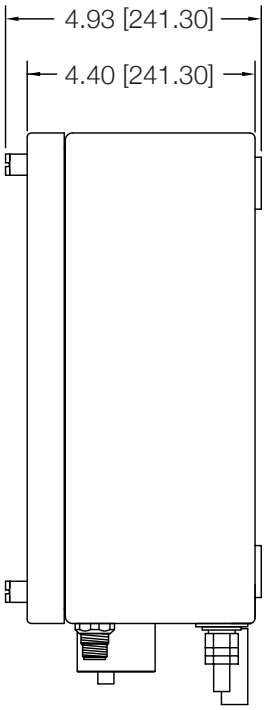

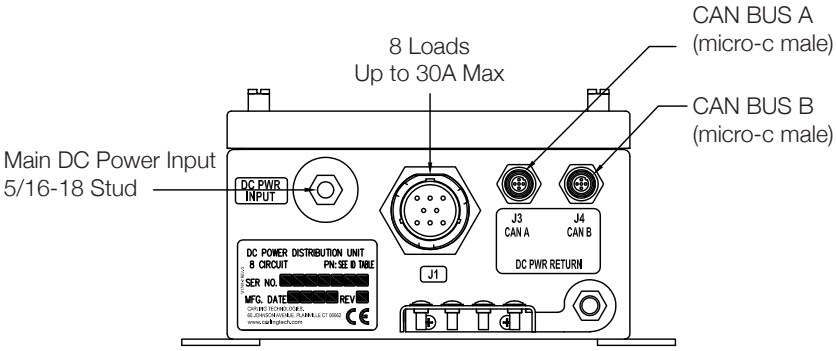

Dimensional Specs in. [mm]

16 Circuit DC Power Distribution Unit
A3655

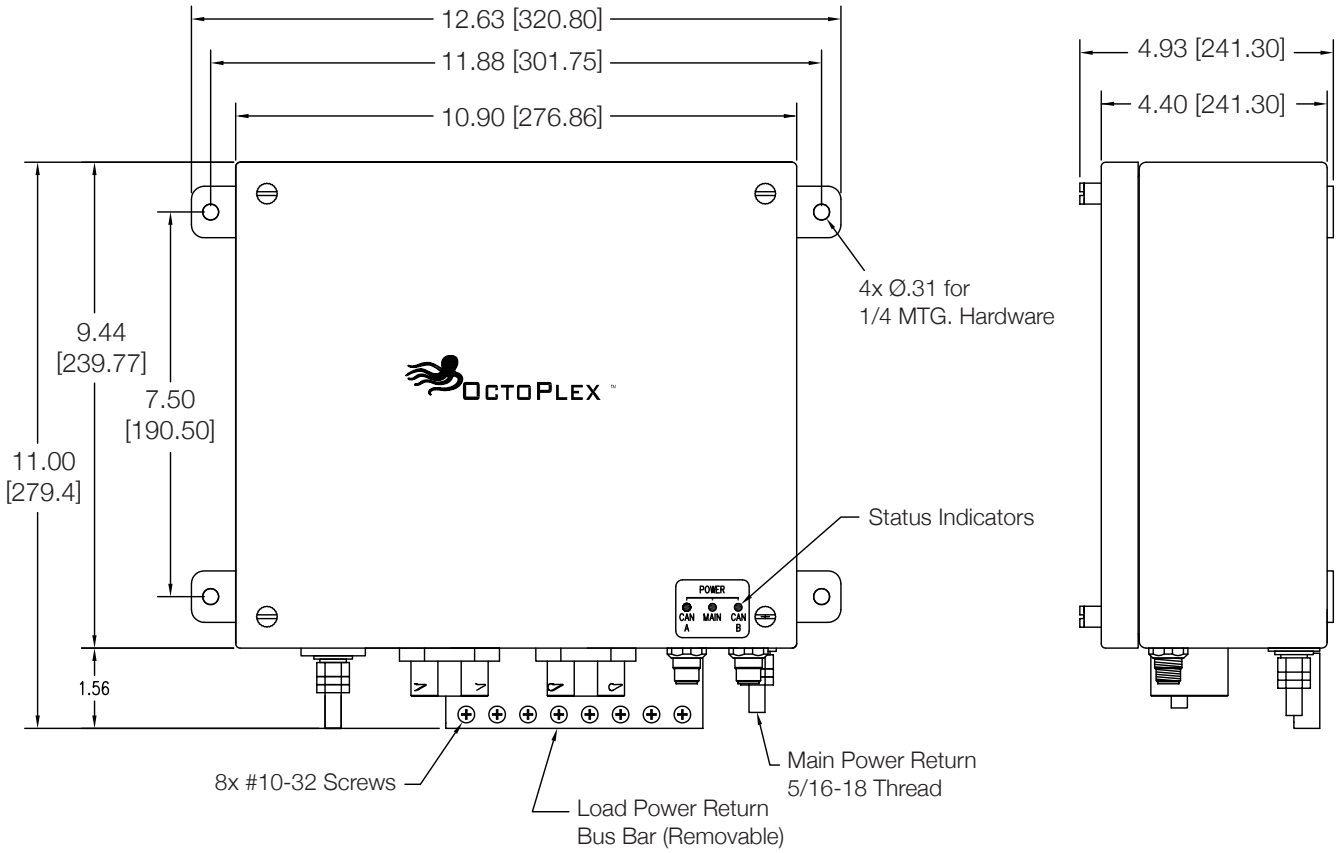

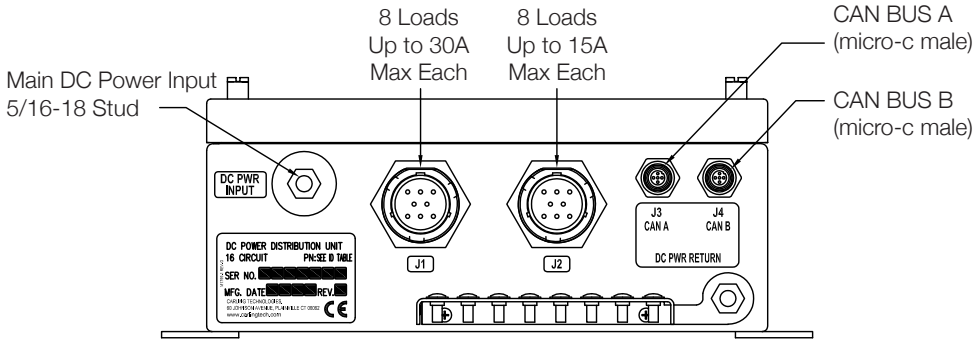

Network Power Supply

The Network Power Supply (NPS) provides regulated +15 VDC to the OctoPlex dual CAN network system. The power supply utilizes one AC and two DC power inputs for redundancy.

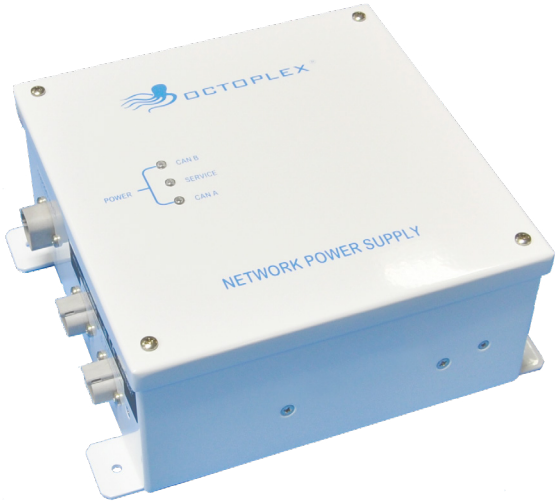

Product Highlights

- 120 VAC Input Power (Carling P/N A3205-1)
- 230VAC Input Power (Carling P/N A3205-2)
- +24V DC Input Power
- Dual CAN Bus Connection/Communications
- 7.5 amp Thermal breakers for each 15 volt output
- Network Health LED Status Indicators

PRODUCTS

PART NUMBER	DESCRIPTION
A3205-1	Network Power Supply, 110V
A3205-2	Network Power Supply, 230V

Table 1:

LED INDICATIONS	COLOR	CONDITION
CAN Bus A	Green	CAN Bus On
	No Indication	CAN Bus Off
Service	Red	Needs Service
	No Indication	Normal Operation
CAN Bus B	Green	CAN Bus On
	No Indication	CAN Bus Off

Installation

The Network Power Supply should be installed in a location that allows access to the thermal circuit breakers installed on the connector side of the unit. At least one (1) power input (AC or DC) must be present for the NPS to operate. Depending on network complexity, one (1) or more Network Power Supplies can be installed. See Diagrams for Typical Single or Multiple NPS installations.

CAUTION!

This is the only OctoPlex® component, which uses Mini/Thick cable and Mini-C connectors (other components use Micro-C connectors). The drops used for this component should have a Male Mini-C connection on both ends.

Typical Installation Diagram's Single Network Power Supply

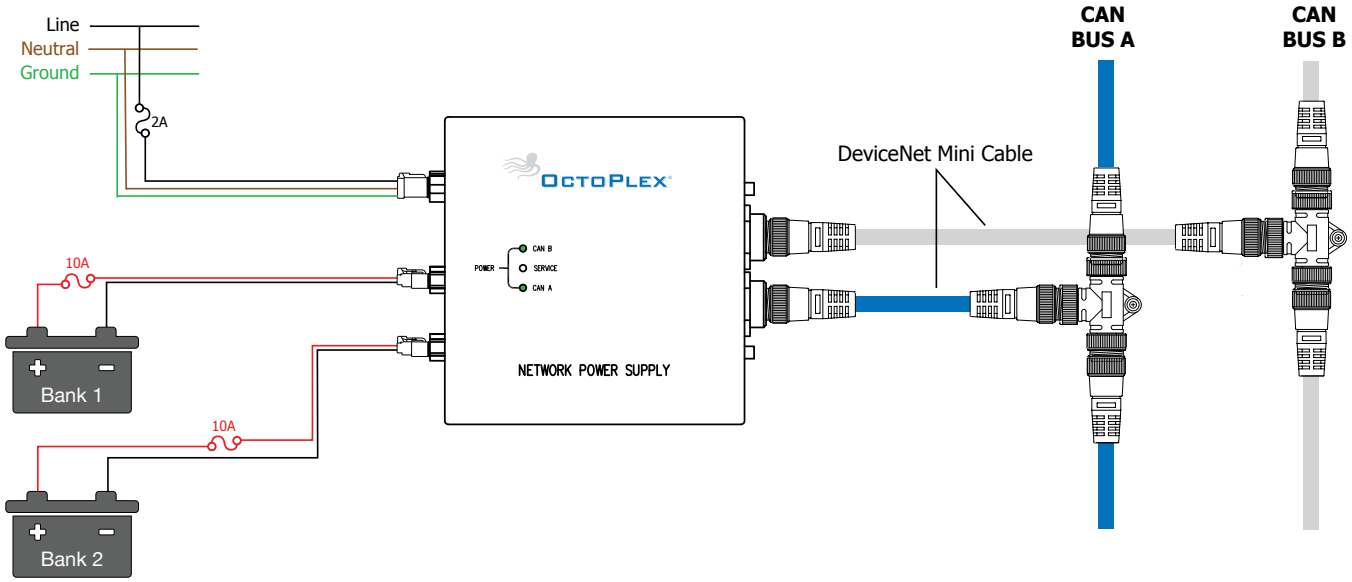

Typical Installation Diagram's Multiple Network Power Supply

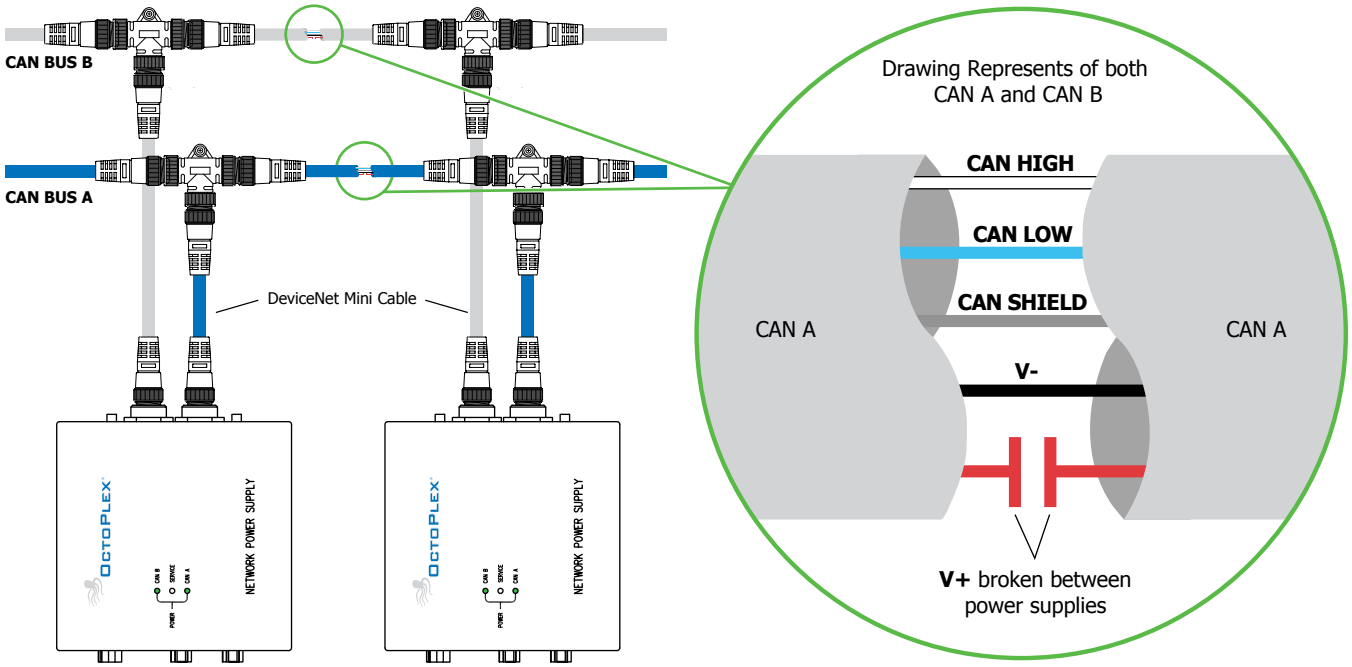

WARNING!

The required number of Network Power Supplies will be determined by the length of the backbone and the sum of the devices powered on the network. If multiple power sources are required, V+ (NET-S) must be broken (on both Buses) between the sources. The SHIELD (drain) must be connected at only ONE power supply.

Pin Out Connections

LED INDICATIONS	COLOR	CONDITION	VIEW	MAKING CONNECTOR
J1 / J2	1	Shield	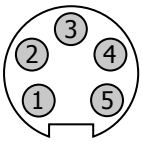	Device Net Mini-C Male
	2	Power Output		
	3	Power Return		
	4	CAN HI		
	5	CAN LOW		
J3	1	AC Neutral	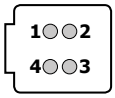	DT06-4S
	2	AC Ground		
	3	AC Ground		
	4	AC Line		
J4 / J5	1	DC Power Input		DT06-2S
	2	DC Power Return		

* Two female Mini-C connectors are provided for connection to the primary and secondary CAN Bus via drop cables.

Operation

Standard Network Power Supply Screen Layout

The NPS screen shows Status of the input power, Source of power (AC, DC1 DC2), CAN A and CAN B status, CAN A and CAN B Voltage and Current readings, and the internal box temperature.

NOTE

This page can vary between installations, as format is determined and/or customizable by the boat builder or owner.

Maintenance

The Network Power Supply requires no maintenance. Any service or repair issues should be handled by a factory authorized technician.

Tech Specs

ELECTRICAL

AC Voltage Input	A3205-1: 90-126VAC; 56Hz - 63Hz A3205-2: 220-264VAC; 47Hz-53Hz
AC Input Current (Max)	2 Amps
DC Voltage Input	18VDC – 36VDC
DC Input Current (Max)	6 Amps
CAN Bus Output Voltage	+15 VDC (± 0.5)
Load Equivalence Number (LEN)	0

MECHANICAL

Dimensions	7.80" X 8.84" X 3.85"
CAN Bus Connectors	Two (2) Mini Female
AC Power Input Connector	Deutsch P/N DT06-4S
DC Power Input Connector	Two (2) Deutsch P/N DT06-2S
Mounting	4 each 4 x 0.16 #6 hardware

CERTIFICATIONS

NMEA 2000	Category B
Lloyd's Register	Lloyd's Type Approved, Test Specification #1, Env 2
CE	**IEC 60533** Electrical and Electronic Installations in Ships **IEC 60945** Maritime Navigation and Radio Communication

ENVIRONMENTAL

Radiated, RF Field Immunity	IEC-61000-4-3
Electrical Fast Transient/Burst Immunity	IEC 61000-4-4
Voltage Surge Immunity	IEC 61000-4-5
Conducted, Immunity	IEC 61000-4-6
Conducted Emissions	IEC 60945
Voltage Variation Immunity	IEC 61000-4-11
Conducted LF Immunity	IEC 61000-4-16
ESD Immunity	IEC-61000-4-2
Insulation Resistance	IEC-60092-504
Operating Temperature	-40°C to +70°C
Storage Temperature	-40°C to +85°C
Vibration	IEC-60068-2-6 Test Fc
Temperature Cycle	IEC 60945
Humidity	IEC-60068-2-30 Test Db
Corrosion	IEC 60945
Weight	6.0 lbs (2.72 kg) Max

Dimensional Specs in. [mm]

Network Power Supply

A3205-[ ]

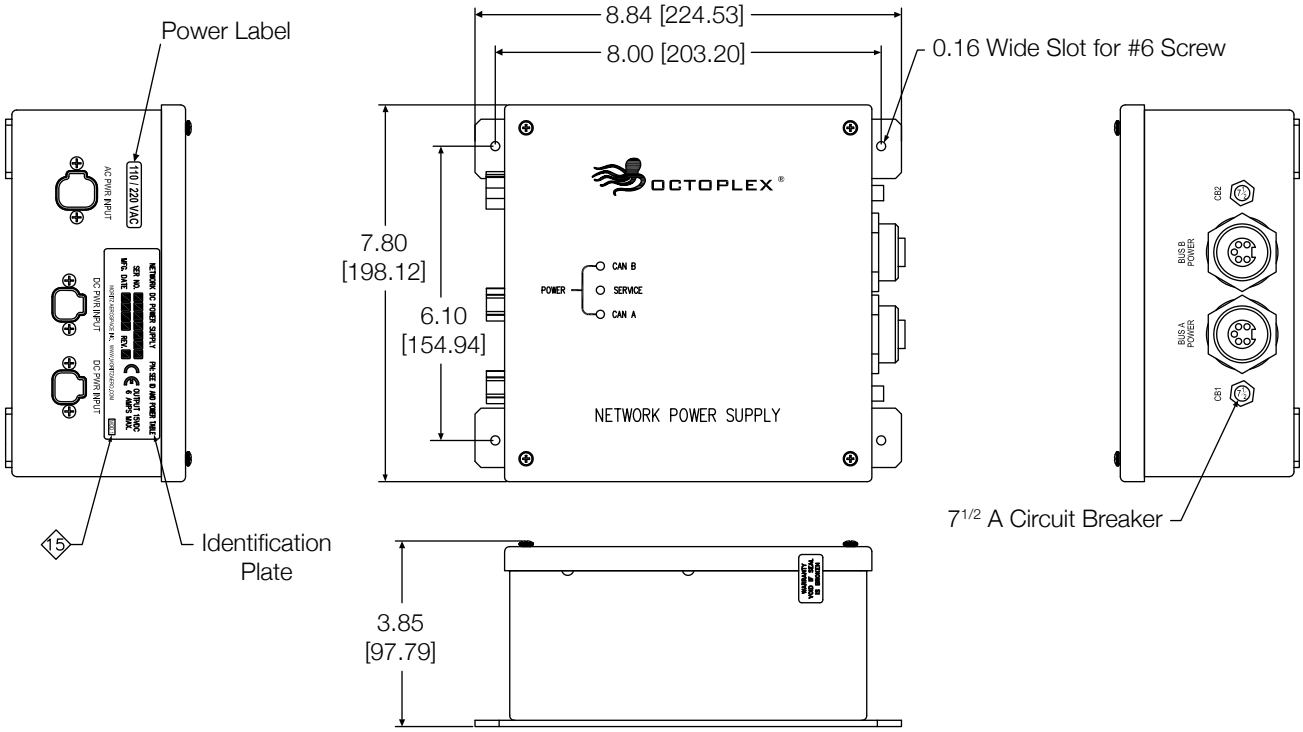

Battery Monitor

The Battery Monitor is capable of measuring one (1) Current, two (2) DC Voltages, and up to four (4) individual battery temperatures. The Battery Monitor Cable Harness (P/N A2225-[], see Table 1 and 2) enables the monitor to connect to the batteries. The Battery Shunt 200 Amp, 50mV (P/N MS91587-2), is needed to measure the current that is installed on the high side of the installation. The Battery Monitor is NMEA 2000® certified, allowing the user to view all DC information over an NMEA 2000 network.

Product Highlights

- Capable of Monitoring the following:
  - Current Measurement
  - Two (2) DC Voltage Measurements
  - Four (4) Temperature Measurements
- Configurable Alerts/Alarms
- Single CAN BUS Communication

PRODUCTS

PART NUMBER	DESCRIPTION
A3680	Battery Monitor (does not include cable harness)
A2225-4	Battery Monitor Cable Harness - 4'
A2225-6	Battery Monitor Cable Harness - 6'
A2225-8	Battery Monitor Cable Harness - 8'
A2225-16	Battery Monitor Cable Harness - 16'
MS91587-2	Battery Shunt 200amp, 50MV
RSC-1000-50	Battery Shunt 1,000amp, 50MV

Installation

The Battery Monitor was designed to be installed in a protected, non-explosive area of the vessel. Take precautions to install the Battery Monitor in an area that will be away from direct exposure to the weather and combustible fumes.

CAN Connections

One male Micro-C connectors is provided on the top of the Battery Monitor for connection to the primary CAN bus via drop cable.

NOTE

Use the shortest drop length possible when connecting the Battery Monitor to the CAN backbone. NMEA 2000 spec is maximum 6 meters for drop cables.

Typical Installation Diagram

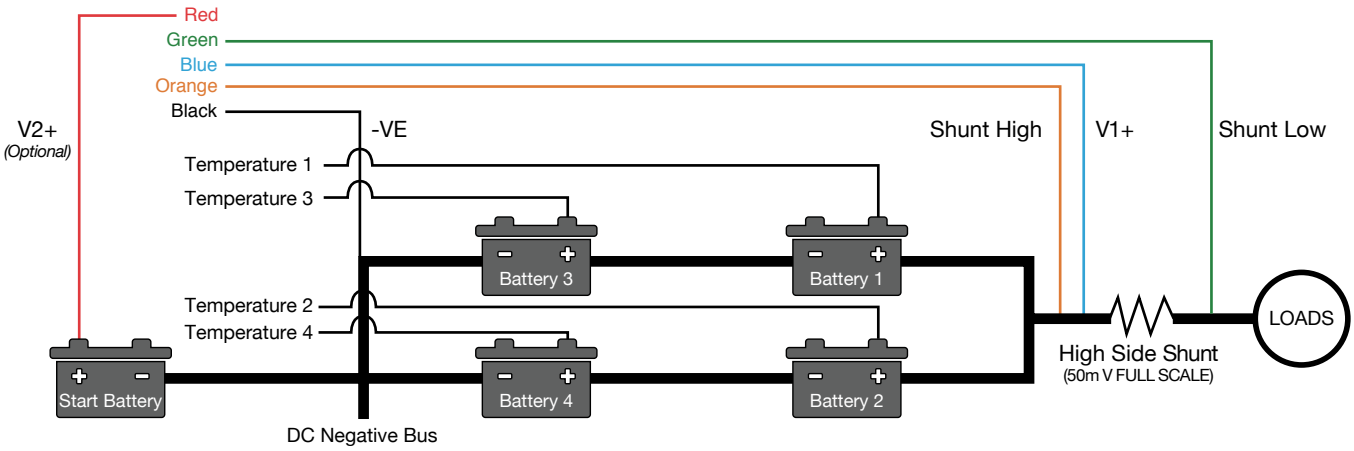

NOTE

Mount Temperature Sensors (Part of A2225-[]) to Battery stud or adhere directly to battery

CAUTION!

When no High Side Shunt is used, tie the orange, green and blue wires directly to the V1+ side of the battery.
Installer must follow applicable industry standards i.e. ABYC/CE for properly wiring and utilizing external protective devices i.e. fuses as required.

Battery Monitor Harness Cable

PIN	CONNECTION	COLOR
1	Temperature Sensor 1 Signal	
2	Shunt High	Orange
3	Temperature Sensor 2 Signal	
4	Temperature Sensor 1 Ground	
5	Ground	Black
6	Shunt Low	Green
7	Temperature Sensor 3 Signal	
8	Temperature Sensor 3 Ground	
9	Temperature Sensor 2 Ground	
10	Reserved	
11	Battery V2+ 12-30VDC	Red
12	Temperature Sensor 4 Signal	
13	Temperature Sensor 4 Ground	
14	Reserved	
15	Not Used	
16	Not Used	
17	Not Unused	
18	Battery V1+ 12-30VDC (Must be connected to power monitor)	Blue

Operation

The Battery Monitor has one (1) configurable parameter; the maximum current value of the high side shunt being used. This parameter is a factory setting. The voltage drop across the high side shunt should not exceed 50 mV for the configured current. For example, if the maximum shunt value selected is 200 amps, then the voltage drop across the high side shunt at 200 Amps should not exceed 50 mV DC.

Standard Battery Monitor Screen Layout

The Battery Monitor screen shows the status (voltage, current, temperature & state of charge) of the battery banks being monitored. Specific configuration and installation of the battery monitor is defined by the boat builder.

NOTE

This page can vary between installations, as format is determined and/or customizable by the boat builder or owner.

Maintenance

The Battery Monitor requires no maintenance. Any service or repair issues should be handled by a factory authorized technician.

Tech Specs

ELECTRICAL

Power Input	12 VDC – 30VDC, 100 mA max (Blue Wire)
DC Voltage Input	12 VDC – 30VDC (Red Wire)
Shunt Voltage	50 mVDC (Orange/Green Wires)
CAN Bus Voltage	+15 VDC (± 0.5)
Load Equivalence Number (LEN)	1

MECHANICAL

Dimensions	5.50" X 2.43" X 2.43"
CAN Bus Connectors	One (1) Micro-C Male
Mounting	4 each 4 x 0.16 #6 hardware
Orientation	N/A

CERTIFICATIONS

NMEA 2000	Category B
Lloyd's Register	Lloyd's Type Approved, Test Specification #1, Env 2
CE	**IEC 60533** Electrical and Electronic Installations in Ships **IEC 60945** Maritime Navigation and Radio Communication Equipment and Systems

ENVIRONMENTAL

Radiated, RF Field Immunity	IEC-61000-4-3
Electrical Fast Transient/Burst Immunity	IEC 61000-4-4
Voltage Surge Immunity	IEC 61000-4-5
Conducted, Immunity	IEC 61000-4-6
Conducted Emissions	IEC 60945
Voltage Variation Immunity	IEC 61000-4-11
Conducted LF Immunity	IEC 61000-4-16
ESD Immunity	IEC-61000-4-2
Insulation Resistance	IEC-60092-504
Operating Temperature	-40°C to +70°C
Storage Temperature	-40°C to +85°C
Temperature Sensor Range	-20°C to +70°C
Temperature Cycle	IEC-60068-2-6 Test Fc
Vibration	IEC 60945
Humidity	IEC-60068-2-30 Test Db
Corrosion	IEC 60945
Weight	0.75 lbs (0.34 kg) nominal

Dimensional Specs in. [mm]

Battery Monitor

A3680

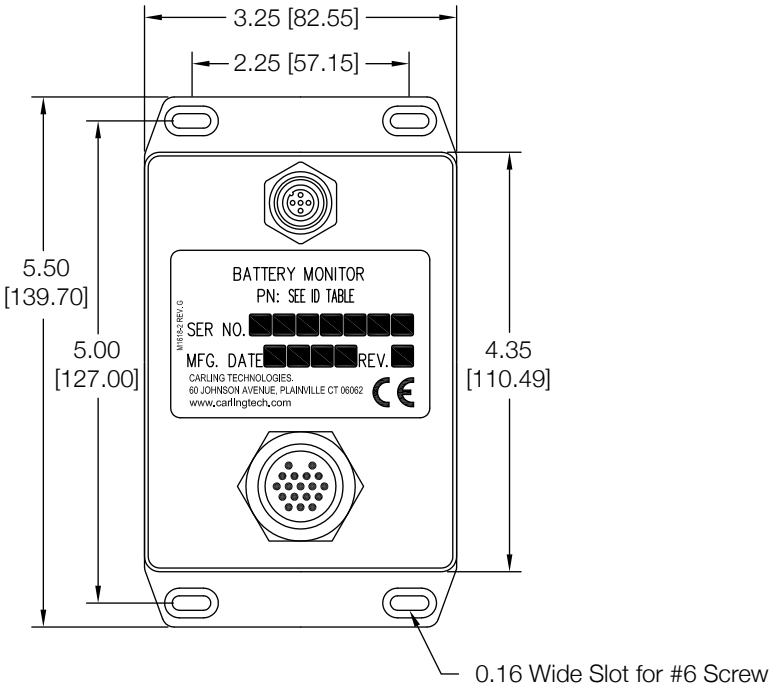

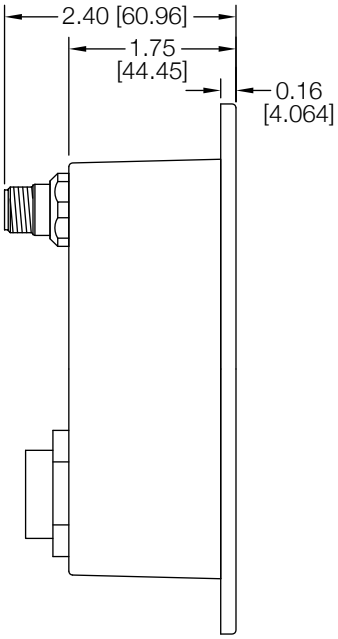

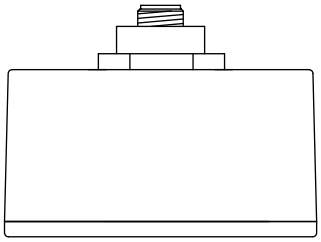

Shunt

Source: www.deltecco.com/MKB-DC.html

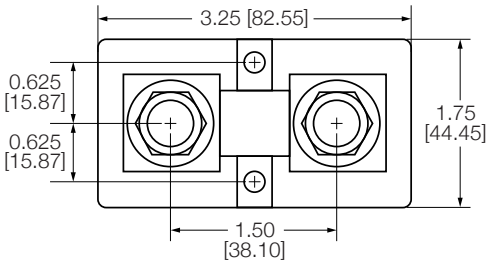

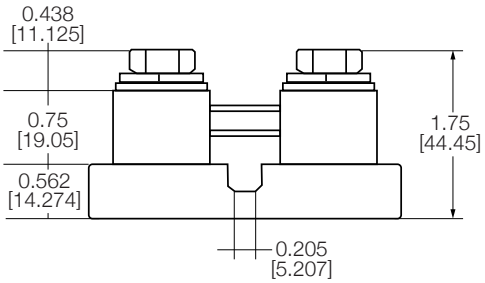

AC POWER MONITOR

The AC Monitor measures the voltage, current and frequency of up to four (4) Single phase single Line AC inputs, two (2) Single Phase Dual Line AC inputs, or one (1) Three phase Three Line AC input. The AC Monitor utilizes dual CAN connections for redundancy.

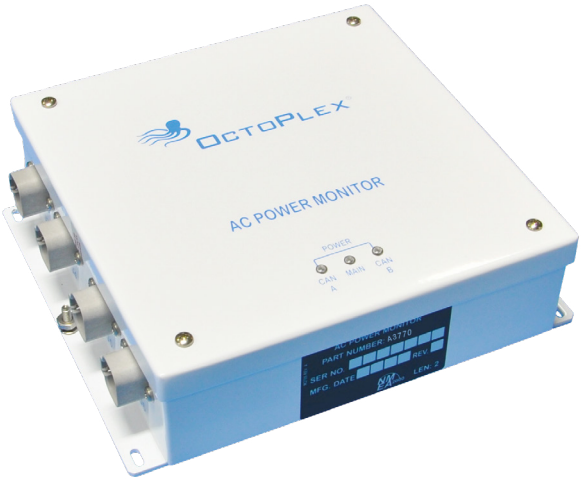

Product Highlights

- Capable of Monitoring the following:
  - Four (4) Single Phase Single Line AC Input
  - Two (2) Single Phase Dual Line AC Inputs
  - One (1) Three Phase Three Line AC Input
- Dual CAN BUS Communication

PRODUCTS

PART NUMBER	DESCRIPTION
A3770	C Power Monitor
CR8459-2000-N	AC Current Transformer

Installation

Depending on the type and number of AC power sources being monitored, the AC Power Monitor requires from one (1) to four (4) Deutsch DT06-4S connectors (Table 1). It is also recommended that 16 AWG wire is used for the connections to the AC sources (Table 2).

Table 1:

DEUTSCH DT06-4S CONNECTOR PINS
1. AC Line
2. AC Neutral
3. AC Current Transformer Input #1
4. AC Current Transformer Input #2

Table 2:

WIRE GAUGE	CONTACT TYPE	DEUTSCH PART NUMBER
16 to 20	Solid	0462-201-16141
14 to 18	Stamped/Formed	1062-16-0122
14 to 18	Stamped/Formed	1062-16-0144

*Manufacturer reserves the right to change product specification without prior notice. Please refer to our website for the latest details.

AC Power Monitor Installation #1

Single 120 VAC/230 VAC (Euro)

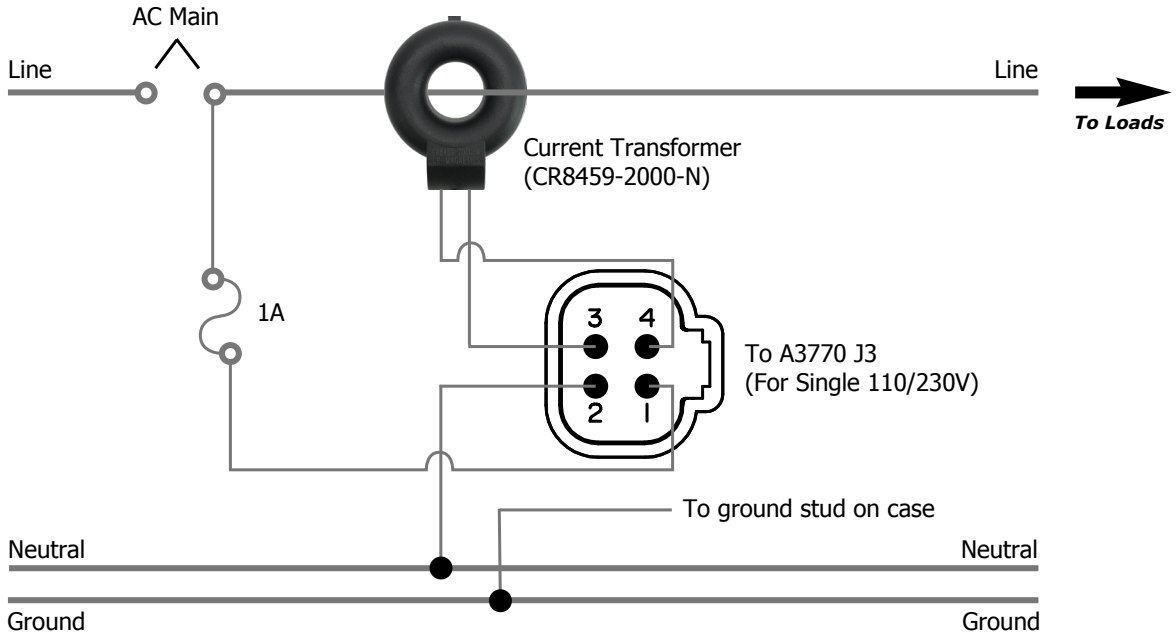

AC Power Monitor Installation #2

Dual 120/240VAC

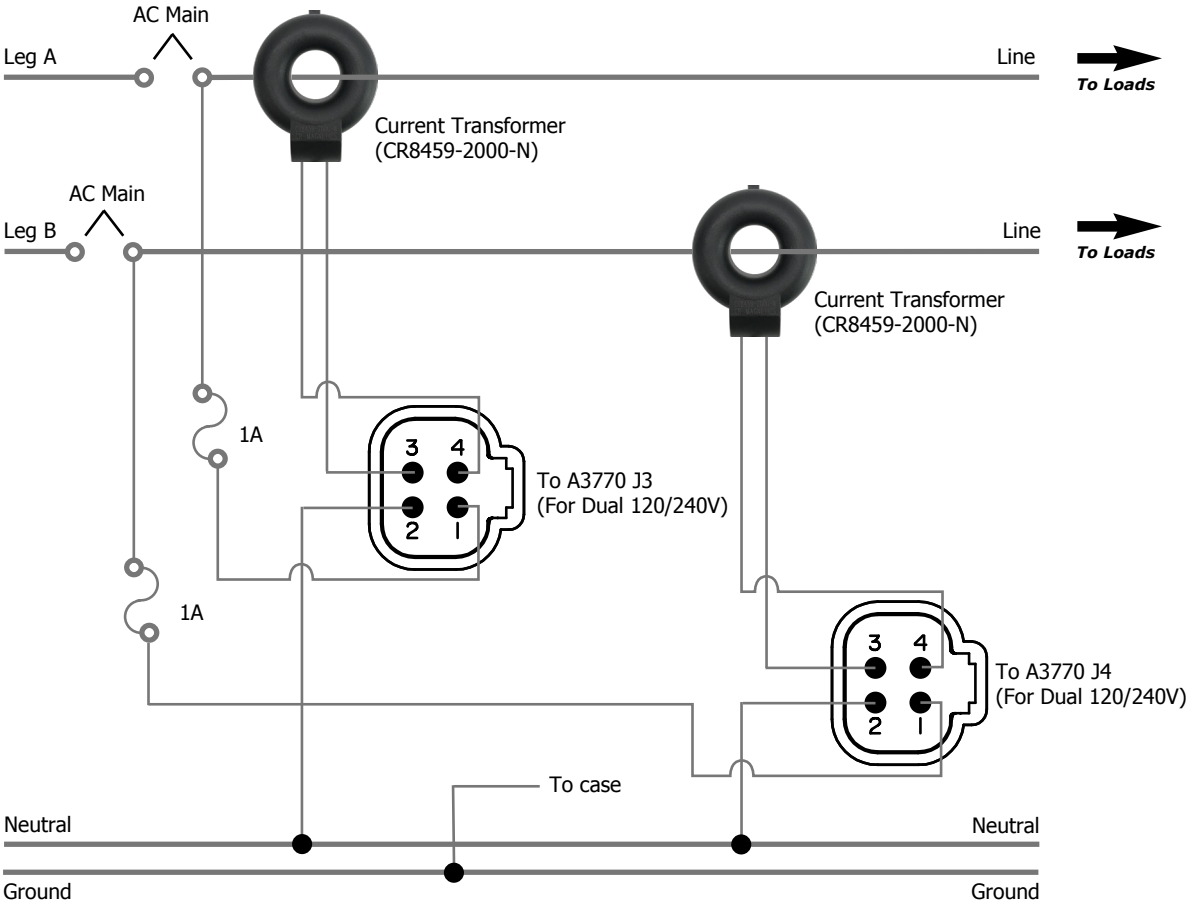

AC Power Monitor Installation #3

Three Phase VAC (120/208VAC or 230/415VAC)

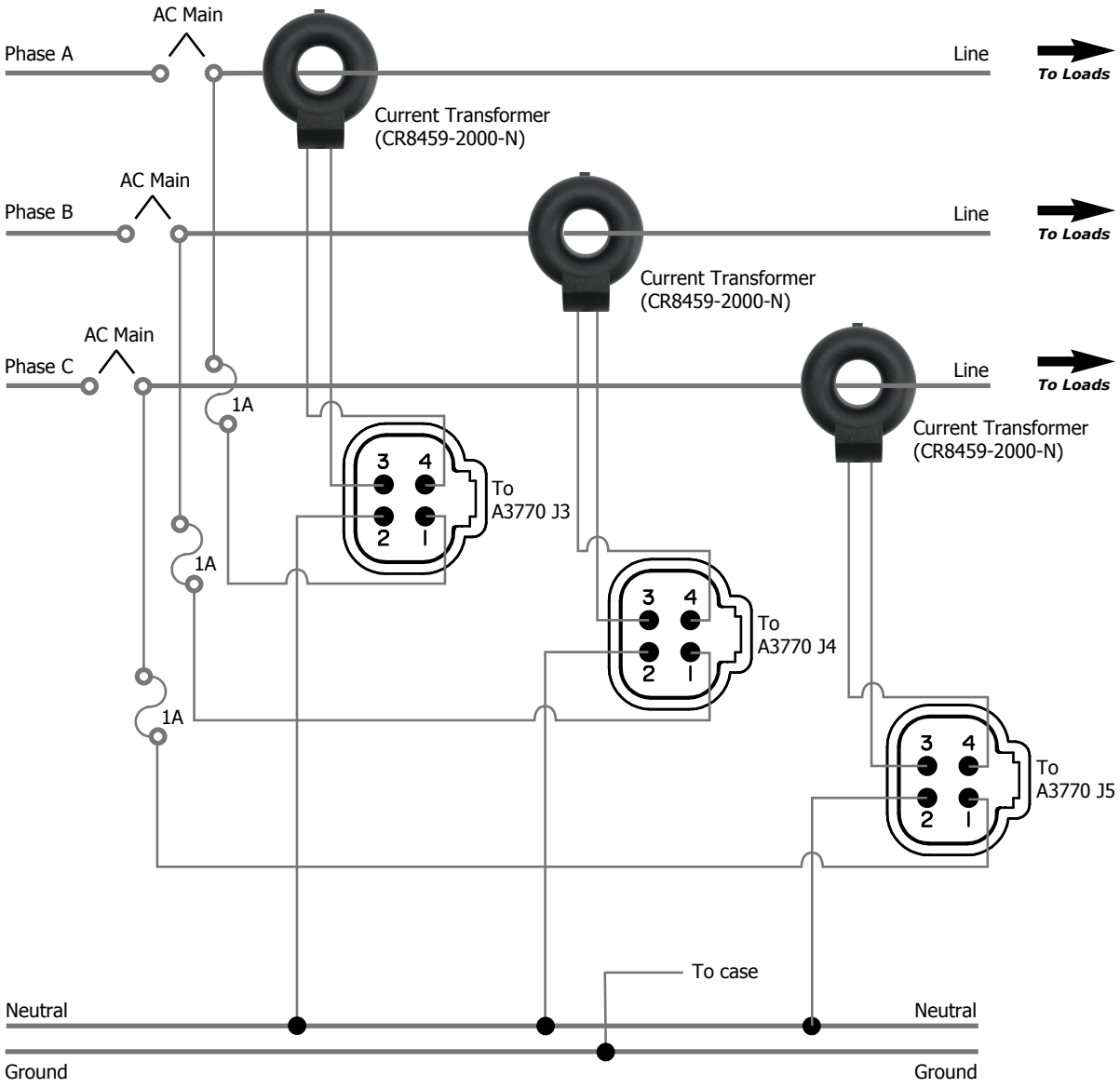

CAN Connections

Two male Micro-C connectors are provided the right side of the AC Monitor for connection to the primary and secondary CAN bus via drop cables.

NOTE

Use the shortest drop length possible when connecting the AC Monitor to the CAN backbone. NMEA 2000 spec is maximum 6 meters for drop cables.

Operation

There are three (3) LED's that are visible through the cover of the AC Power Monitor. The left and right LED's indicate that there is a primary and secondary network connection. The center LED displays the AC Input Power Status (i.e. whether the AC Power monitor is receiving power from the input connectors). The Multi-Function Displays shows the AC voltage (RMS), current and frequency of up to four (4) line inputs; if one or more inputs are not used, that value shall be displayed as zero. The internal temperature of the unit is also displayed.

Standard AC Power Monitor Screen Layout

The AC Power Monitor page shows the status (voltage, current and frequency) of all AC line inputs. Specific configuration and installation of AC monitors are defined by the boat builder.

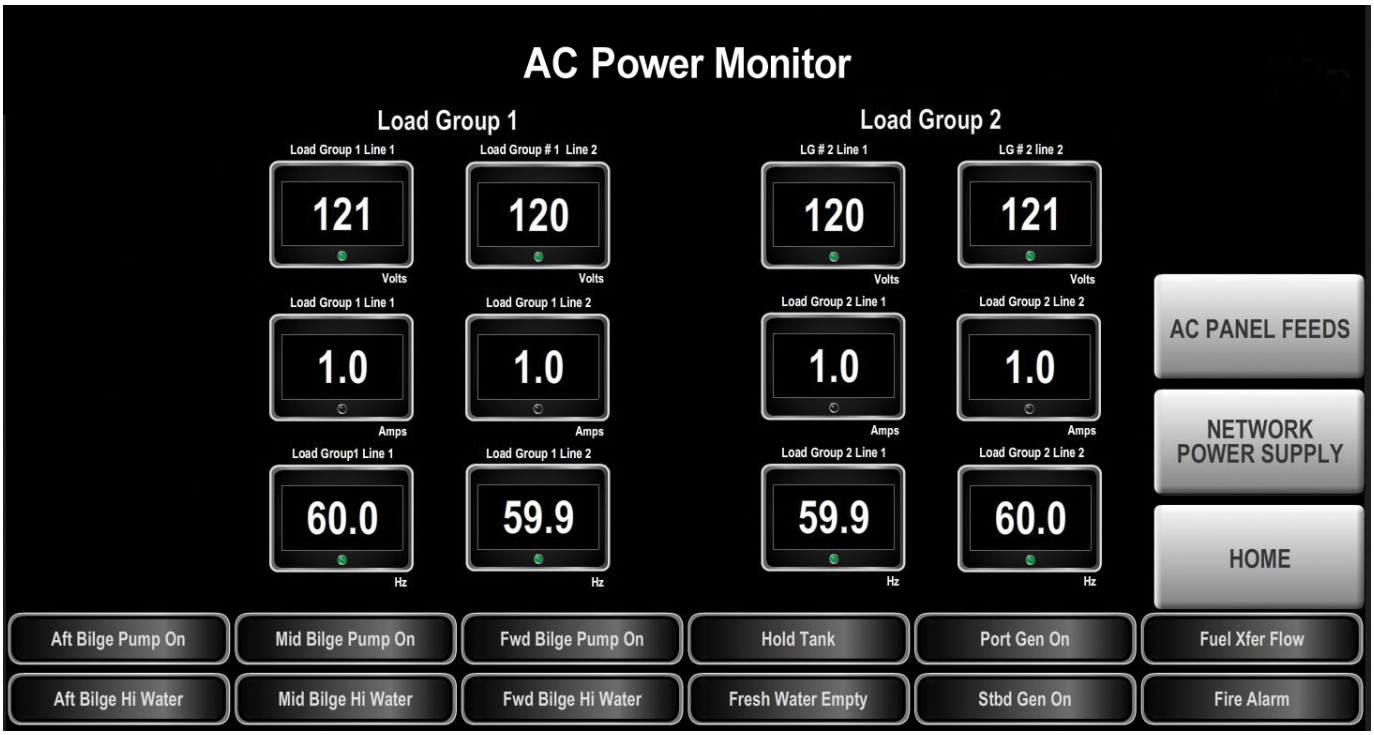

NOTE

This page can vary between installations, as format is determined and/or customizable by the boat builder or owner.

Maintenance

The AC Monitor requires no maintenance. Any service or repair issues should be handled by a factory authorized technician.

Tech Specs

ELECTRICAL

Ac Voltage Input	90VAC – 264VAC
Operating Frequency	50/60 Hz
CAN Bus Voltage	+15 VDC (± 0.5)
Load Equivalence Number (LEN)	2

MECHANICAL

Dimensions	7.52" X 8.51" X 2.67"
CAN Bus Connectors	Two (2) Micro-C Male
Mounting	4 each 4 x 0.16 #6 hardware
Orientation	N/A

CERTIFICATIONS

NMEA 2000	Category B
Lloyd's Register	Lloyd's Type Approved, Test Specification #1, Env 2
CE	**IEC 60533** Electrical and Electronic Installations in Ships **IEC 60945** Maritime Navigation and Radio Communication Equipment and Systems

ENVIRONMENTAL

Radiated, RF Field Immunity	IEC-61000-4-3
Electrical Fast Transient/Burst Immunity	IEC 61000-4-4
Voltage Surge Immunity	IEC 61000-4-5
Conducted, Immunity	IEC 61000-4-6
Conducted Emissions	IEC 60945
Voltage Variation Immunity	IEC 61000-4-11
Conducted LF Immunity	IEC 61000-4-16
ESD Immunity	IEC-61000-4-2
Insulation Resistance	IEC-60092-504
Operating Temperature	-40°C to +70°C
Storage Temperature	-40°C to +85°C
Vibration	IEC-60068-2-6 Test Fc
Temperature Cycle	IEC 60945
Humidity	IEC-60068-2-30 Test Db
Corrosion	IEC 60945
Weight	3.6 lbs (1.64 kg) nominal

Dimensional Specs in. [mm]

AC Power Monitor
A3770

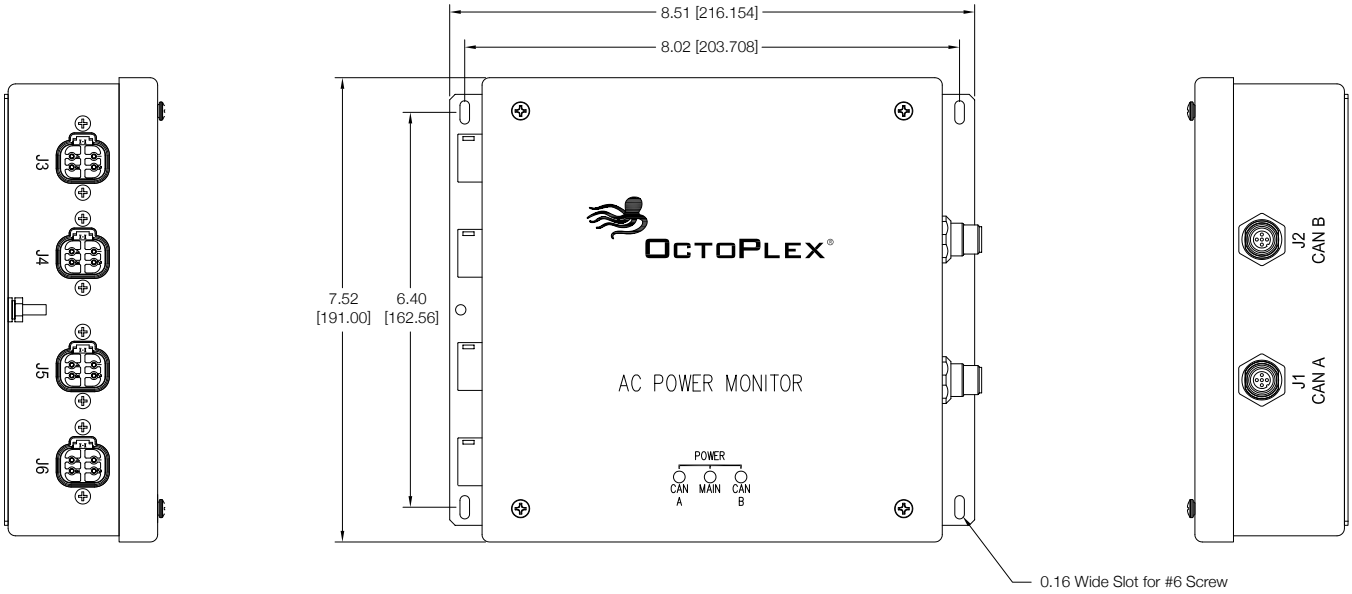

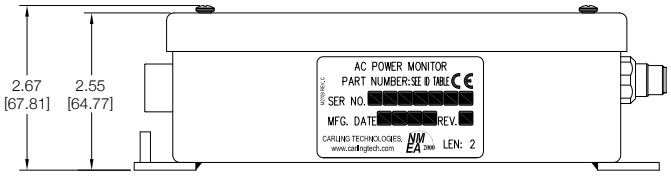

Transformer
CR8459-2000-N

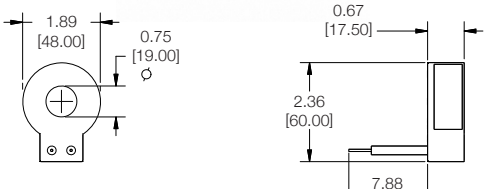

For complete detail, please visit the following link: **www.crmagnetics.com/Assets/ProductPDFs/CR8400%20Series.pdf**

System Interface Unit Monitor (SIU)

The System Interface Unit Monitor (SIU) allows the user to interface with up to 34 digital signals (DC discrete inputs) to the OctoPlex® system for status and monitoring purposes. The SIU can be configured to perform Discrete I/O Functions, in conjunction with the AC and DC Distribution units.

Product Highlights

- 34 digital Signal Interface
- Discrete I/O Functions
  - Control AC Breakers
  - Control DC Breakers
  - DC Light Dimming Control
  - Time Interval On/Off
- Active high and active low states
- Can activate alarms

PRODUCTS

PART NUMBER	DESCRIPTION
A3470	System Interface Unit Monitor

Configuration

Signal Input

Each SIU input signal can be configured to perform a function based on the input level. When an input goes to the "Active" state, the configured function will be performed. The table below describes the "Active" states that any SIU input can be configured for:

Low Input	Configured function will be Active when the input Signal is to ground (VDC –ve)
High Input	Configured function will be Active when the input signal is above 8 VDC (VDC +ve)
Both	Configured functions will be Active when either a high or low input is detected

* Note: Both (either) State is the Default setting
* Note: Pins 39 & 40 can only be set to Both

Output Message

The SIU broadcasts a NMEA 2000 PGN to the OctoPlex network when the SIU receives a state change on a configured input. This information can be received and processed by any NMEA 2000 device designed to process the Binary Switch Bank Status PGN. All OctoPlex AC, DC and Multi-function Display devices allow processing of SIU signals through Discrete I/O handlers. Each Output Message has a “Normal State” and an “Abnormal State” associated with it. For example, an input could be set up such that the “Normal State” is low and the “Abnormal State” is high. When the input goes high, the Multi-function Display could be configured to provide an indication to the user that a change in the device state has been detected. In some configurations it is required to “Arm” the State/Alarm. For example, a pump inline Flow Sensor, with no flow (pump off) the sensor would be in the Normally Open/Abnormal State. The Alarm would only be activated if the sensor goes Open (Abnormal State), while the pump is running. In this example, the SIU is configured to Arm the Alarm with appropriate Signal State Stimulus.

SIGNAL STATE STIMULUS	DESCRIPTION
State to Active	Set Alarm state Off when Signal goes Active
State to Inactive	Set Alarm state On when Signal goes Inactive

Signal Examples

INPUT	STATUS	DESCRIPTION
High Water Alarm	NO	Normal OFF, Circuit closes Abnormal ON - Alarm on State to Active
Float Switch Power	NC	Normal ON, Circuit Opens Abnormal OFF - Alarm on State to Inactive
Engine Temperature Alarm	NO	Normal OFF, Circuit Closes Abnormal ON - Alarm on State to Active
Water Flow Alarm	NC	Normal OFF (Closed when Pump On), Circuit Opens Abnormal ON - Alarm on State Inactive
Light Switch	NO	Normal Off, Circuit Closes Abnormal ON - trigger DIO for ECB control while ON maintained
Tank Empty	NO	Trigger a Discrete I/O to Turn OFF the associated pump breaker(s)
Holding Tank Full	NO	Trigger a Discrete I/O to Turn OFF head flush breaker(s)

Application Example:

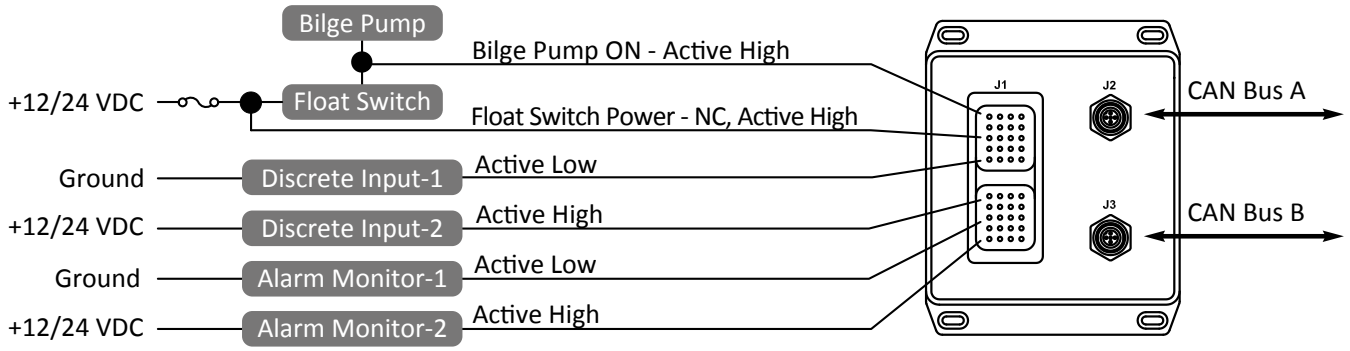

Use of Blocking Diodes

In applications where a load, controlled by an Electronic Circuit Breaker (ECB), within a DC Power Distribution Unit, can also be turned on by a float switch or another switch outside of the OctoPlex system, a blocking diode must be placed between the ECB output and the load it is controlling. Failure to install the blocking diode will result in hardware malfunction in situations where the float switch is turning the load/pump ON while the ECB for the load is OFF (ECB error of Abnormal High/Back feed). This may be applicable for sump pumps as well.

Blocking Diodes Example:

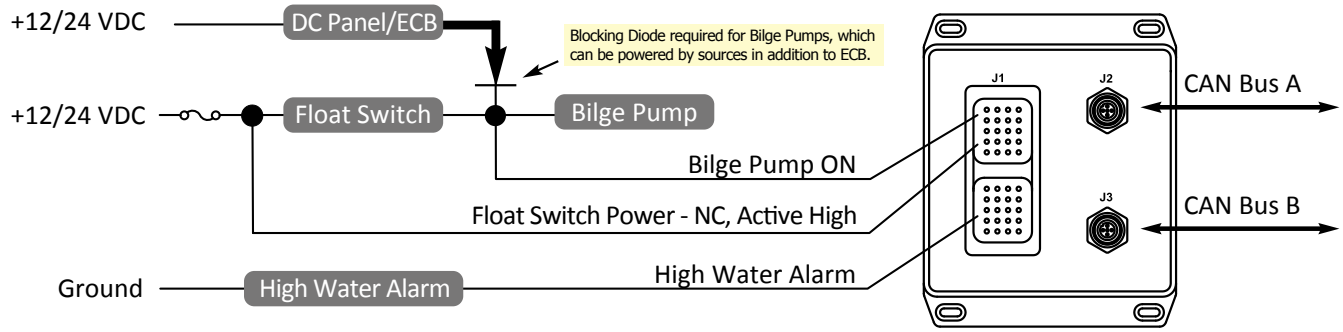

PART NUMBER	DIODES PER UNIT	NOTES
A1935	2	Standard Unit
A1940	10	Special Order

NOTE

Blocking diodes to prevent back feed of power to the ECB are available from Carling and are rated at 15 Amps, 32 VDC.

Installation

The SIU is designed to be installed in a protected, non-explosive area of the vessel. Take precautions to install the SIU in an area that will be away from direct exposure to the weather and combustible fumes.

Connections

The terminals available for use in the Deutsch DRC16-40S connectors are:

WIRE GAUGE	CONTACT TYPE	DEUTSCH PART NUMBER
14 to 18	Solid	0462-201-16141
14 to 18	Stamped/Formed	1062-16-0122
14 to 18	Stamped/Formed	1062-16-0144

CAUTION!

Recommended wire gauge is 16. Limit wire length to 50 feet.
Deutsch recommends a torque of 25 to 28 in/lbs be applied to the center mounting screw during assembly.

The SIU can be powered using one power input pin; the SIU allows for up to three (3) different power input pins for redundancy purposes:

CONNECTOR PIN NUMBER	+ 12 VDC (5A FUSE)	+ 24 VDC (5A FUSE)	DC RETURN	DISCRETE INPUTS
1,2,3	YES	YES	N/A	N/A
8,9,10	N/A	N/A	YES	N/A
4-7,11-40	N/A	N/A	N/A	YES

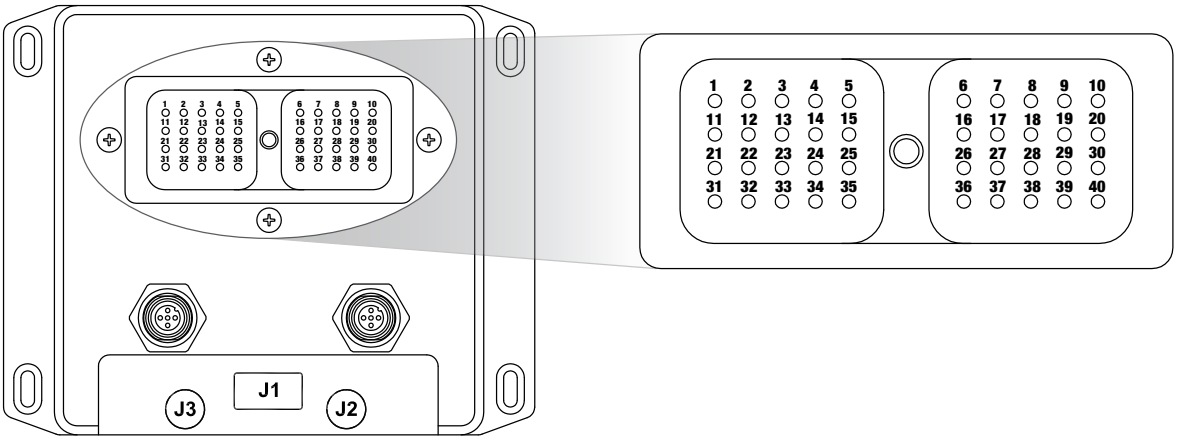

CAN Connections

Two male Micro-C connectors are provided to the right side of the System Interface Unit Monitor for connection to the primary and secondary CAN bus via drop cables.

NOTE

Use the shortest drop length possible when connecting the System Interface Unit Monitor to the CAN backbone. NMEA 2000 spec is maximum 6 meters for drop cables.

Operation

Standard System Interface Unit Monitor (SIU) Screen Layout

The SIU screen shows the 34 Discrete I/O indicators that are being monitored by the SIU. These indicators can not be acknowledged by the user; up to Qty. 10 also appear on the bottom of most pages.

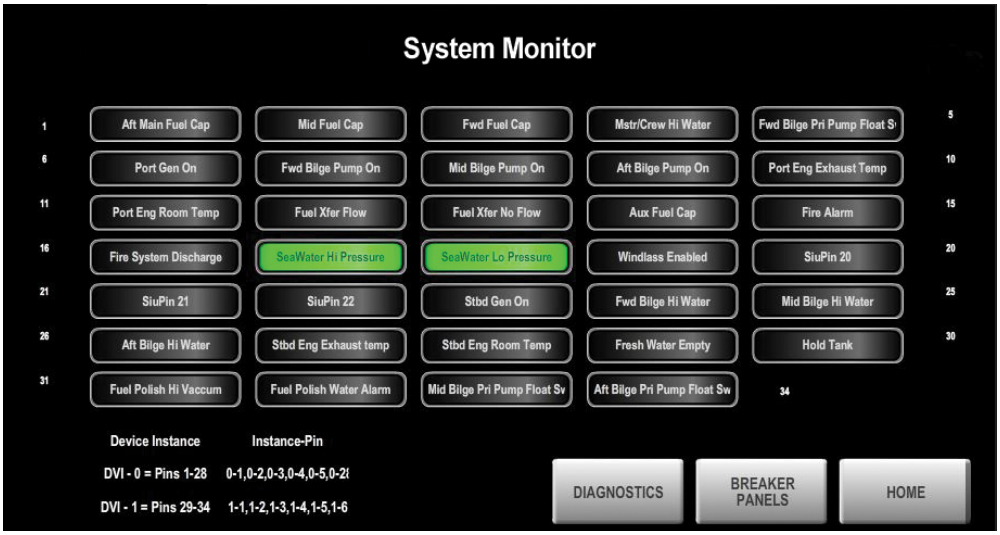

NOTE

This page can vary between installations, as format is determined and/or customizable by the boat builder or owner.

Maintenance

The System Interface Unit Monitor was designed to require no maintenance. Any service or repair issues should be handled by a factory authorized technician.

Tech Specs

ELECTRICAL

Power Input	10 VDC – 32 VDC
Power Consumption	00 mA Max (@ 28 VDC)
DC Signal Input	Ground; 12 VDC; 24 VDC for each input
CAN Bus Voltage	+15 VDC (± 0.5)
Load Equivalence Number (LEN)	1

MECHANICAL

Dimensions	5.89" X 4.74" X 2.95"
CAN Bus Connectors	Two (2) Micro-C Male
Mounting	4 each 4 x 0.16 #6 hardware
Orientation	N/A

CERTIFICATIONS

NMEA 2000	Category B
Lloyd's Register	Lloyd's Type Approved, Test Specification #1, Env 2
CE	**IEC 60533** Electrical and Electronic Installations in Ships **IEC 60945** Maritime Navigation and Radio Communication Equipment and Systems

ENVIRONMENTAL

Radiated, RF Field Immunity	IEC-61000-4-3
Electrical Fast Transient/Burst Immunity	IEC 61000-4-4
Voltage Surge Immunity	IEC 61000-4-5
Conducted, Immunity	IEC 61000-4-6
Conducted Emissions	IEC 60945
Voltage Variation Immunity	IEC 61000-4-11
Conducted LF Immunity	IEC 61000-4-16
ESD Immunity	IEC-61000-4-2
Insulation Resistance	IEC-60092-504
Operating Temperature	-40°C to +70°C
Storage Temperature	-40°C to +85°C
Vibration	IEC-60068-2-6 Test Fc
Temperature Cycle	IEC 60945
Humidity	IEC-60068-2-30 Test Db
Corrosion	IEC 60945
Weight	1.6 lbs (0.73 kg) nominal

Dimensional Specs in. [mm]

System Interface Unit Monitor (SIU)
A3470

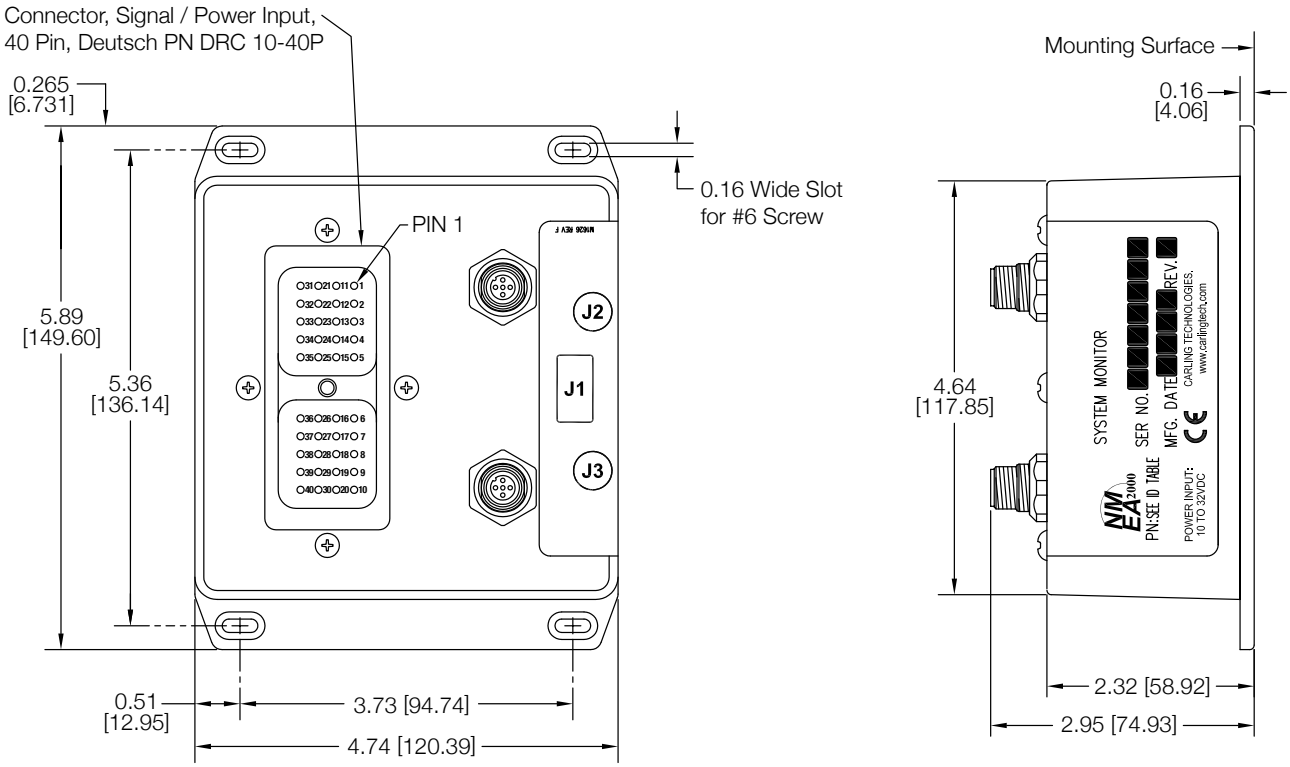

NMEA 2000®
Network Installation Guide

Installing an NMEA 2000® Network

Installing an NMEA 2000® network consists of interconnecting NMEA 2000® electronic devices using plug-and-play cables and connectors. The following pages provide a brief description of how to set up a NMEA 2000® network using five basic steps:

1. Cable and Connector Network Basics
2. Installing Terminators
3. Supplying Power
4. Grounding the Network
5. Checking the Network

Please note that this installation guide contains a brief description of the basic concepts of installing an NMEA 2000® network suggests that you consult a trained professional for any installation. You can learn more about installing NMEA 2000® networks by contacting the National Marine Electronics Association (NMEA) at www.nmea.org and consulting the following documents:

- NMEA 2000® Standard for Serial-Data Networking of Marine Electronic Devices
- NMEA Installation Standards

1. CABLE AND CONNECTOR NETWORK BASICS

1.1 Network Topology

The NMEA 2000® cable system uses a trunk (sometimes referred to as the backbone) and drop line topology as shown in Figure 1.

The NMEA 2000® cable system includes five wires within a single waterproof cable: two signal wires, power and ground wires, and a drain wire. The drain wire shields the signal, power, and ground wires from external Radio Frequency Interference (RFI) and helps reduce RFI emission from the cable.

You can connect devices using one of three cable options:

Mini - This is commonly used for the trunk line on the network because of its greater current carrying capacity (8 amps) as opposed to Micro cable (4 amps). Mini cable has an outside diameter in the range from 0.41 to 0.49 inches. Its maximum installed bend radius is 7x the cable diameter. You can also use this type of cable for drop lines.

Mid - This is commonly used for smaller networks as either the network trunk line or as drop lines. Mid cable and connectors are rated to 4 amps just like

FIGURE 1. NMEA 2000® Network Topology

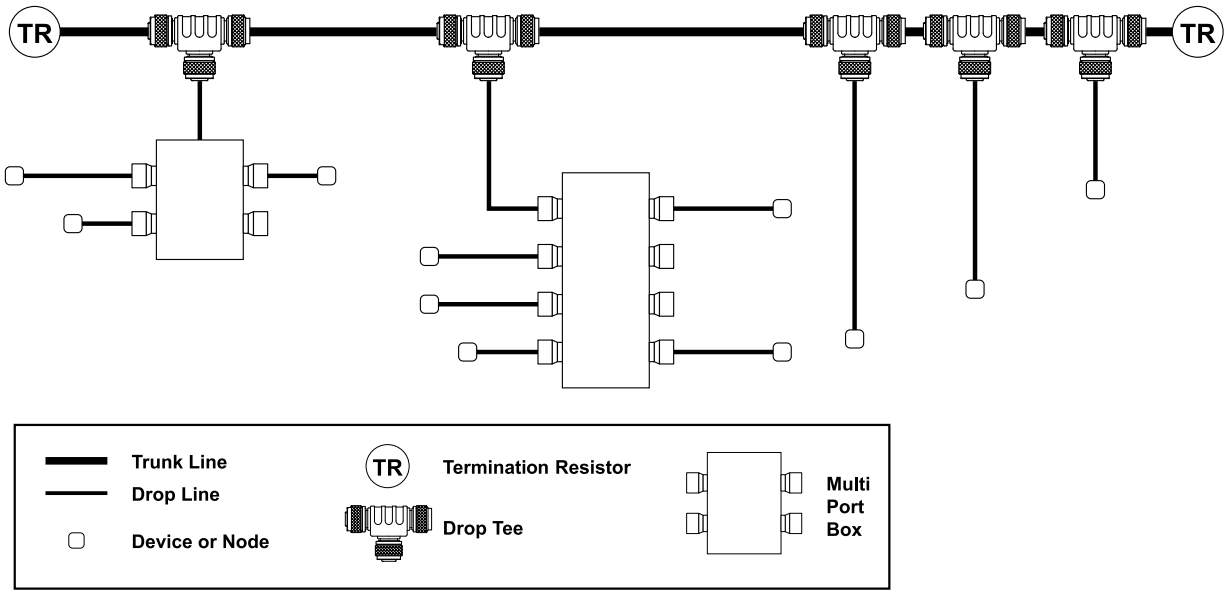

the Micro cable, however the larger diameter power conductors within the Mid cable provides for less voltage drop over Micro cable, especially for long runs. The diameter of the Mid cable is 0.33 inches.

Micro - This cable type is typically used as the drop line connecting devices to the main trunk line with an outside diameter in the range from 0.24 to 0.28 inches. Micro cable has a smaller diameter and is more flexible than mini cable with an installation bend radius of 7x the cable diameter. Smaller networks use this type of cable for both the trunk and drop lines.

You construct the trunk line using double-ended cordsets connected between tees or taps. One end of the cordset has a male connector with male pins while the other end of the cordset has a female connector and female receptacles. The connectors are keyed so they can only connect to each other in one way. As an alternative to double-ended cordsets, you can make your own trunk line using bulk cable and field-attachable connectors. If you decide to add equipment later, you can simply disconnect a cordset from a tee, add another tee directly to the existing tee, re-connect the cordset and add the new component to the system using a drop cable. Alternatively, you could cut the trunk line, add two field-attachable connectors and insert a new tee. Trunk lines can also be run up to watertight bulkheads and connected to a waterproof bulkhead feed-thru connector to maintain the integrity of watertight compartments.

To drop off the trunk line, you connect a device using a tee connector. Daisy-chaining of devices is not allowed, as it is a requirement to be able to remove a component from the network without affecting any other device. This allows you to remove a device for servicing while the rest of the network remains operational. Multiport boxes are also available where instruments tend to be clustered, around the helm for example.

1.2 Maximum Cable Distance

The NMEA 2000® cable system uses a trunk (sometimes referred to as the backbone) and drop line topology as shown in Figure 1.

The cable distance between any two points (a point being an electronic product or terminator) must not exceed 250 meters (820 feet) for a system based on the Mini or Mid trunk cable or 100 meters (328 feet) for a system based on a Micro trunk cable.

For most cases, the maximum distance should be measured between termination resistors. However, if the distance from a trunk line tee to the farthest device connected to the trunk line is greater than the distance from the tee to the nearest terminating resistor (TR), then you MUST include the drop line length as part of the cable length in your maximum cable distance calculation. Figure 2 shows an example where both 5 meter drops must be included in the maximum cable distance since the drops are longer than the distance from the tee to termination resistor.

FIGURE 2. Maximum Cable Length Determination

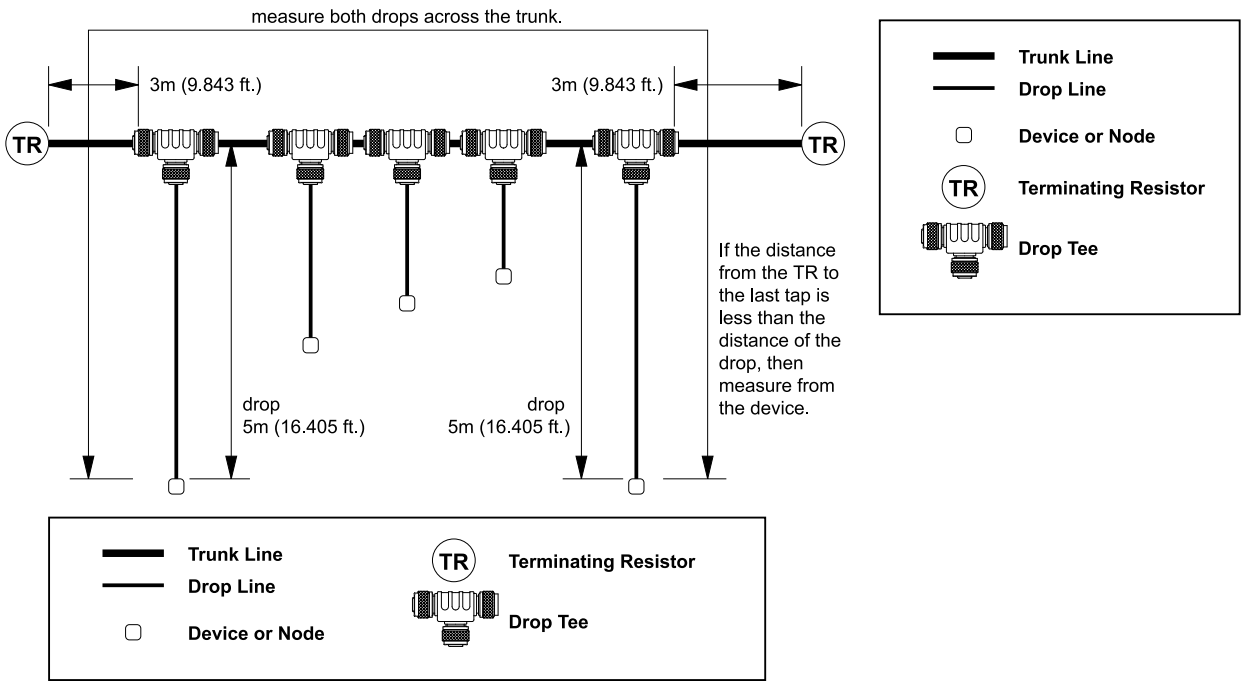

1.3 Cumulative Drop Line Length

The cumulative drop line length refers to the sum of all drop lines, Mini, Mid or Micro cable in the cabling system. This sum cannot exceed 78 meters (256 feet). Figure 3 shows an example using four drop tees and two multiport drops to attach 11 devices to the trunk line. The cumulative drop line length is 37 meters (122 feet) and no single device is more than 6 meters (20 feet) from the trunk line.

1.4. Maximum Drop Line Length

The maximum cable distance from any device on a branching drop line to the trunk line is 6 meters (20 feet).

1.5 Maximum Number of Devices

A maximum of 50 physical devices can be connected to the network, and the disconnection of any device can not interrupt any other device on the network.

1.6 NMEA 2000® Connector

The Mini, Mid and Micro cables contain five wires: One twisted pair (red and black) for 12VDC power, one twisted pair (blue and white) for signal and a drain wire (bare).

The following table shows the color, name, and usage for each wire contained within the cable.

COLOR	NAME	USAGE
White	NET-H	Signal
Blue	NET-L	Signal
Bare	SHIELD	Drain
Black	NET-C	Ground
Red	NET-S	Power

1.7 NMEA 2000® Connectors

Connectors attach cables to devices or other components of the NMEA 2000® cable system. This allows the network to be completely "plug-and-play". Connections can be made with pre-molded cordsets or with field-attachable connectors. The following diagram shows the pins found within Mini connector and the Micro and Mid connector and the corresponding wire colors for those pins.

2. INSTALLING TERMINATORS

Termination resistors are attached to each end of the trunk cable to reduce reflections of the communication signals on the network. If you do not use termination resistors as described, the network will not operate properly. Termination resistors are typically connected directly to the last tee on the trunk line although they can be connected to a cordset extending from the last tee on a trunk line. Inline terminators are also available and they are used to terminate the network at the last product.

3. Supplying Power (OctoPlex Powered by Network Power Supply)

3.1 End-Powered Network

End-powered networks are typically seen on smaller vessels with only a few NMEA 2000® devices. Figure 4 shows an end-powered network.

3.2 Middle-Powered Network

A middle-powered network is typically found on larger vessels and is any network where the power is connected to the network at some location other than at the end. This network consists of two legs, one leg extending in each direction from the power insertion point. Figure 5 shows a middle-powered network.

FIGURE 3. Maximum Cumulative Drop Line Length Determination

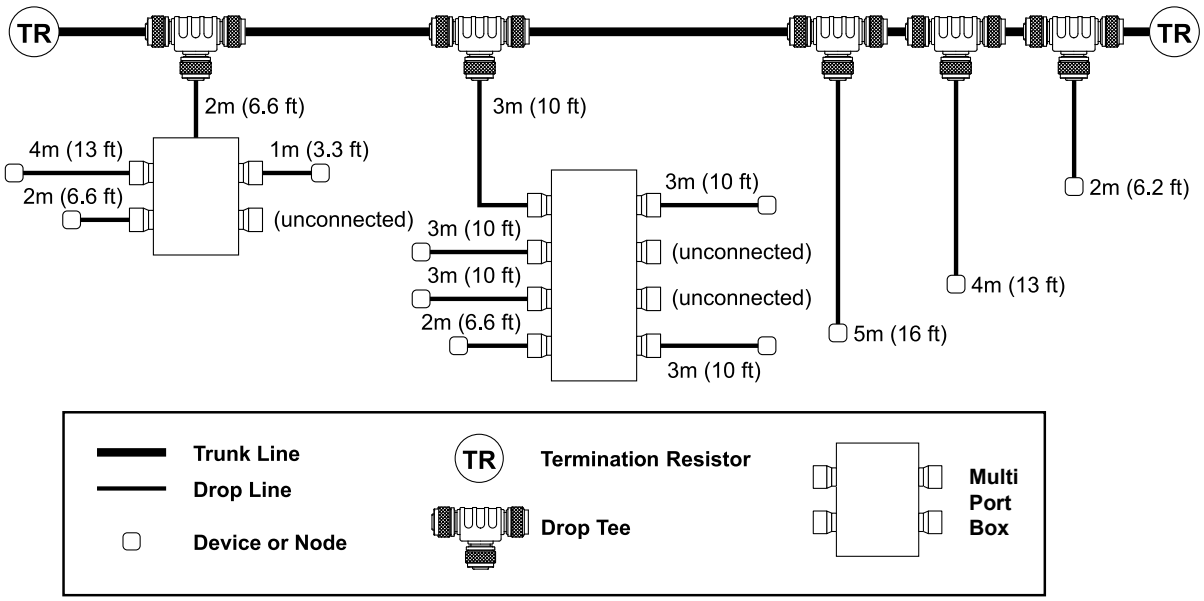

3.3 Maximum Power Supply Voltage Drop

The NMEA 2000® network is designed to work properly as long as there is no more than a 1.5 volt difference in the power supply voltage between any two devices on the network. Therefore, you should perform an estimate of the voltage drop across a network using the following equation:

Voltage Drop = 0.1 x Network Loads x Network Length x Cable Resistance/100

Where: Network Loads is sum of Load Equivalent Numbers (LEN) for all devices (see device nameplate)
Network Length is in meters
Cable resistance is in ohms/100 meters

Power supply voltage drop estimates resulting in less than 1.5 volts across the entire network require no further analysis. Likewise, estimates ranging between 1.5 and 3.0 volts require no further analysis as long as a mid-powered network is used. Occasionally, estimated power supply voltage drops will occur outside these limits and will require further consideration through detailed calculations by certified technicians.

4. Ground the Network

The NMEA 2000® network should be grounded at ONE location. Grounding at more than one location may produce ground loops, which can cause problems with communications on the network. In addition to the ground wire, connect the drain or SHIELD wire at the supply ground location and NO other place.

5. Checking Your Network

Verify that the network has been correctly designed and installed by reviewing the following checklist:

- Number of devices does not exceed 50
- Maximum Mini cable distance between any two devices does not exceed 250 meters (820 feet)
- Maximum Micro/Mid cable distance between any two devices does not exceed 100 meters (328 feet)
- Maximum cumulative drop line length does not exceed 78 meters (256 feet)
- No drop should be greater than 6 meters (20 feet)
- Termination resistors are installed on both ends of the trunk
- The network is grounded at a single location
- The SHIELD wire is connected to a single point, the supply ground location

If you are having difficulties with the network make sure to check the following most common network problems:

- More or less than two terminating resistors
- Loose connections, make sure that all connectors are securely fastened
- Excessive trunk line length-especially with Micro cable
- Excessive drop line cable length
- Improper shield and ground connection at the power supply
- Shorts and opens in field-attachable connectors
- Failure to perform power distribution calculations for new installations and when adding new devices
- Using a typical device current rather than maximum current for power distribution calculations

In order to insure the proper installation and configuration of an NMEA 2000® network, it is a good idea to have

FIGURE 4. End-Powered Network

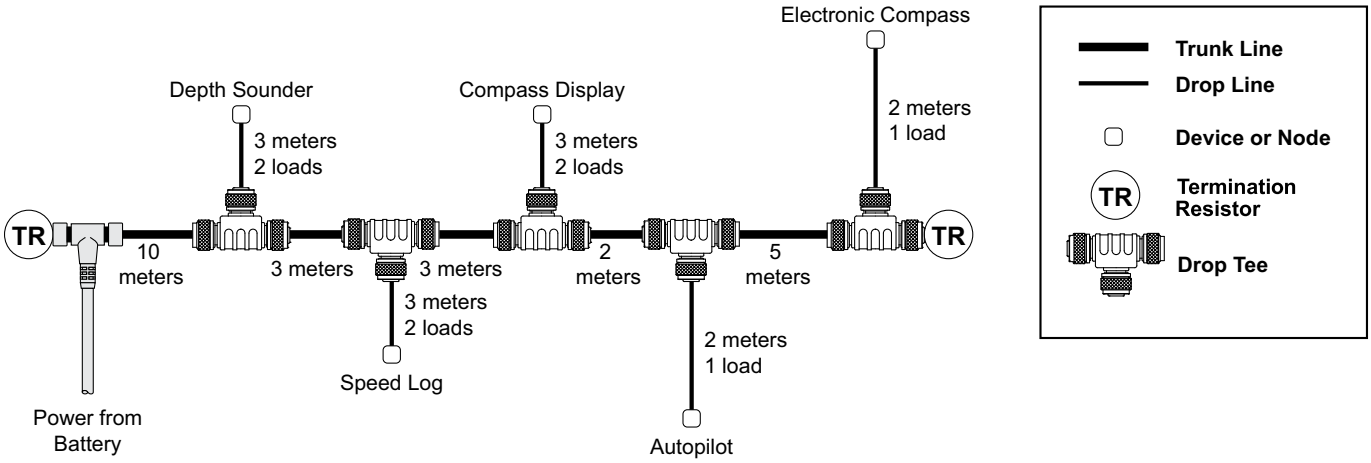

available at least one N2KMeter®. The N2KMeter® greatly simplifies network diagnostics and can detect many fault conditions including:

- Opens and shorts
- Incorrect topology
- Bad nodes
- Bad termination
- Improper shield connection
- Intermittent problems
- Excessive scan rate
- Common mode voltage

FIGURE 5. Middle-Powered Network

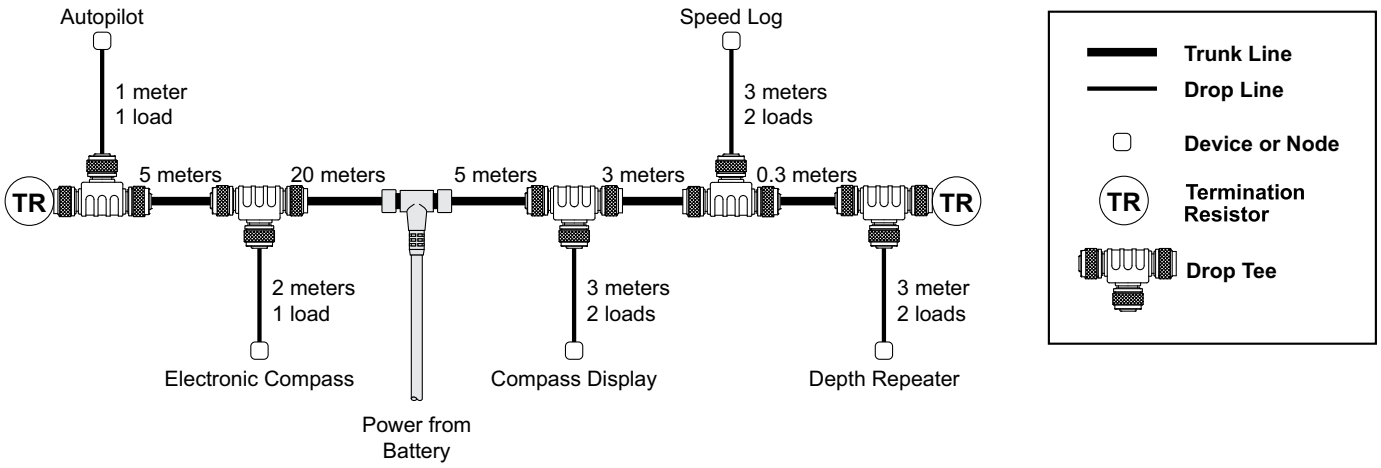

NMEA 2000®

Trouble Shooting Guide

The OctoPlex® System can be reset by removing power from all OctoPlex components. Tank Adapters receive their power directly from the network. These components can be reset by pulling out the breakers in the Network Power Supply to remove power from the bus. All other components receive their power from sources other than the network/ bus. These components (DC Power Distribution Units, AC power Distribution Units, Battery Monitors, System Interface Unit Monitors, AC Power Monitor, Network Power Supply, Multi Function Displays) must have their power disabled by removing fuses or turning off the main breakers installed by the boat builder which supply their power.

MULTI-FUNCTION DISPLAY

SYMPTOMS	POSSIBLE CAUSES	TESTS / REMEDIES
Multi-Function Display is blank	Multi-Function Display backlight is OFF	Circuit breaker state on network power up
	No AC or DC power reaching Multi-Function Display	Reset the system by turning off all AC and DC power to the Power Supply, SIU, Battery Monitor, and DC Units. Cycle power on Multi-Function Display.
Multi-Function Display operation/refresh rate is very slow	Communication problem	Last known state on network power up
Multi-Function Display has locked up, does not respond when "touched"	1. High network traffic 2. Software malfunction 3. Multi-Function Display hardware failure	Reboot Multi-Function Display by cycling 24VDC power supply to screen. Determine reason for high traffic rate. Replace Multi-Function Display.
Pages on the Multi-Function Display do not show any or correct data	Data source device is offline or not connected. Configuration file error.	Check device for power at the drop and connection to the network. Correct configuration file.
Multi-Function Display is rebooting by itself	Multi-Function Display power is cycling	Check Multi-Function Display Power Supply.

BATTERY MONITOR

SYMPTOMS	POSSIBLE CAUSES	TESTS / REMEDIES
Battery Monitor displays no data or incorrect data	No DC power reaching Battery monitor	The Battery Monitor requires DC power to operate. Check to see that battery monitor is connected/wired properly. The blue wire must be connected to 12/24VDC. The black wire must be connected to Ground
	Bad drop cable	If the cable is confirmed to be bad, replace it. Bad cables are often a result of wire tires forcing the cables into tight bends.
	Improper wiring of Battery Monitor	Refer to Battery Monitor setup.

NOTE

If the unit displays nothing or incorrect/ invalid data, verify the instance number is correct.

NETWORK POWER SUPPLY

SYMPTOMS	POSSIBLE CAUSES	TESTS / REMEDIES
Network Power Supply Service Light	Input voltage is out of range Low or High	Check voltages at the input plug. Remove/replace the top Deutsch connector (AC input)
	Internal input to output out of range	
	Internal failure detected.	Call service center.

DC POWER DISTRIBUTION UNIT

SYMPTOMS	POSSIBLE CAUSES	TESTS / REMEDIES
Multi-Function Display is blank	No DC power reaching DC Unit	If no DC power is reaching the DC Unit, the breakers can not be turned on from the Multi-Function Displays and will be displayed as inactive. Check to ensure that the boat's main DC breakers are ON. There is also a main breaker within the DC Unit, if it is OFF, all of the branch breakers in the unit will be inactive. Once the main breaker in the unit is turned ON (must be done manually), the branch breakers will become active and controllable.
	Improper Multi-Function Display configuration	Refer to Multi-Function Display setup.
	Faulty processor board in DC Unit	Try removing ECB's from unit and replacing with known working ECB's to eliminate the possibility of a bad ECB causing a communication problem.
DC Breakers trip immediately when turned on regardless of load.	ECB current rating too low	Check the configuration of the ECB to confirm that the current rating is properly set. Adjust if necessary.
	Faulty ECB Short Circuit in external wiring	Attempt swapping out the suspect ECB with a known good ECB. If the problem is resolved, the ECB is faulty and needs to be replaced. Remove round Deutch plugs at bottom of box & reset breaker if fault disappears check circuit for short.
DC Distribution Unit Phantom Breaker tips	Low input power voltage to unit < 9VDC	Check Input voltage at power input lug to DC Unit.
DC Load Device low voltage/slow behavior	ECB may have dimming applied	Check output voltage at pin Check TS ECB button for present settings of Default Dimming value and dimming allowed.

AC POWER DISTRIBUTION UNIT

SYMPTOMS	POSSIBLE CAUSES	TESTS / REMEDIES
Multi-Function Displays indicate AC breakers are inactive	Main breakers in AC Unit are turned OFF	If the main breaker within an AC Unit is OFF, all of the branch breakers in the unit will be inactive. Once the main breaker in the unit is turned ON (either manually or via the Multi-Function Display), the branch breakers will become active and controllable.
	Faulty processor board in AC Unit	Processor board may require replacement. If it is an AC problem, solenoids should be checked for shorts between leads (proper resistance is ~78 Ohms for single and ~39 for double), which could damage AC processor board.
AC Distribution Unit Load Buttons do not respond to touch	AC power to the distribution unit is not present.	Check shore and/or genset input. Power Present lights on the upper right corner of unit will be ON if power is present.
	Solenoid not firing.	Swap Solenoids if bad
	Breaker trip Coil.	Swap breaker
	Processor board faulty.	Swap processor board
AC breakers do not appear to control circuits	Solenoid misfire / Faulty solenoid	It is possible that an AC breaker did not turn completely on when solenoid was activated. Attempt to turn the AC breaker on again, if AC breaker repeatedly trips or does not turn on when activated, check solenoid for problems.
AC breakers trip immediately when turned on regardless of load	Solenoid not firing completely or breaker stiff	Check all solenoid connectors on the AC Unit in question to confirm their proper location. Exercise breaker. Check for dead short on load.

SYSTEM INTERFACE UNIT MONITOR (SIU)

SYMPTOMS	POSSIBLE CAUSES	TESTS / REMEDIES
SIU inputs do not behave as expected (monitoring and/or discrete inputs controlling breakers)	No DC power reaching SIU	The SIU requires DC power to operate, it does not receive power from the network. Check to see that the SIU is connected/wired properly. Pin 1, 2, or 3 must be connected to and receiving 24VDC. Pin 8, 9, or 10 must be connected to Ground.
	SIU is not installed properly or miswired	The SIU requires DC Power and Ground to operate correctly. The signal inputs should use the same reference (DC Power or Ground) as what is being used to power the SIU.
	Improper Multi-Function Display configuration	Refer to Multi-Function Display setup.

NOTE

If the unit displays nothing or incorrect/ invalid data, verify the instance number is correct.

SYSTEM INTERFACE UNIT MONITOR (SIU)

SYMPTOMS	POSSIBLE CAUSES	TESTS / REMEDIES
AC Monitor displays no data or incorrect data	No AC power reaching AC monitor	The AC Monitor requires an AC voltage for the line 1/J3 connector. It does not receive power from the network. Check this connector to see that an AC voltage is being supplied.
	Bad drop cable	Use the suspected component with only one drop cable connected at a time. If one of the cables appears to be bad, attempt using the good cable on the other connector to confirm that the cable is the problem and not one of the component's connectors. If the cable is confirmed to be bad, replace it. Bad cables are often a result of wire tires forcing the cables into tight bends.
	Improper wiring of AC Monitor or Current Transformers	Refer to AC Power Monitor setup.

NMEA 2000® PARAMETER GROUP NUMBERS

PGN TYPE	PGN NUMBER	PGN NAME
Protocol PGNs	059392	ISO Acknowledge
	059904	ISO Request
	060928	ISO Address Claim
	056240	ISO Address Command
	126208	NMEA Request/Command/Acknowledge
Response PGNs	126464	PGN List (Transmit/Receive)
	126996	Product Information
	126998	Configuration Information
	127508	Battery Status (Battery Monitor only)*
Periodic PGNs	127501	Binary Switch Bank Status **
Proprietary PGNs	61184	Addressable Single Frame
	65300	Global Single Frame
	126720	Addressable Fast Packet
	130921	Global Fast Packet
	65301	Global Single Frame (AC Monitor only)

* multiple device and data instances per unit for the Battery Monitor
** multiple device and data instances per unit for the System Interface Unit Monitor

Appendix

Multi-Function Display

Switch / Breaker Button Indicators

OctoPlex Switch/Breaker Buttons are displayed as indicators with a pre-defined color scheme. Touching a Breaker button will change the state of the load.

COLOR CODE GUIDE	BREAKER STATUS	DESCRIPTION
	Not Active; Unavailable	This is a switch/breaker that is currently not active. The distribution panel is most likely not receiving any power (AC or DC) or the distribution panel's main breaker is in the OFF position. This indication can also be present if communication to the multi-function display is lost.
	Active; OFF	This is a switch/breaker that is active, but currently in the OFF position. Pressing the button will turn the breaker ON.
	Active; ON	This is a switch/breaker which is active and currently in the ON position. Pressing the button will turn the breaker OFF.
	Active; TRIPPED	This is a switch/breaker that is active, but has been tripped by an over-current situation. Pressing and holding the button will bring up a sub menu, which allows the user to reset the breaker (turn OFF) and then turn the breaker back ON with an additional press.
	Active; Locked OFF	This is a switch/breaker that has been locked in the OFF position. The 'UNLOCK' button can be used to unlock this breaker.
	Active; Locked ON	This is a switch/breaker that has been locked in the ON position. The 'UNLOCK' button can be used to unlock this breaker.
	Active; Group OFF	This is a switch/breaker that has been setup with Group Control OFF.
	Active; Group ON	This is a switch/breaker that has been setup with Group Control ON.
	Active; Load Shedding OFF	This is a breaker with Load Shedding OFF **(AC Only)**.
	Active; Load Shedding ON	This is a breaker with Load Shedding ON **(AC Only)**.
	Active; Local Override OFF	DC Unit switched into Local Mode; Electronic Circuit Breaker (ECB) toggle switch in the OFF Position **(DC Only)**.
	Active; Local Override ON	DC Unit switched into Local Mode; Electronic Circuit Breaker (ECB) toggle switch in the ON Position **(DC Only)**.

Appendix

Multi-Function Display

Hot Button

A Hot Button is used for navigating around the OctoPlex® system. Touch the desired Hot Button to navigate through selected functions.

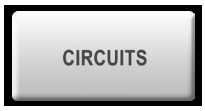

Status Indicators

Status Indicators are indicators that appear on the bottom of the screen or on selected pages. They are not buttons that the user can not acknowledge; these are status indications from the System Interface Unit Monitor (SIU) that are transmitted on the OctoPlex® system.

COLOR CODE GUIDE	BREAKER STATUS	DESCRIPTION
Status Indicator	Inactive	This is a system status indication that is currently inactive.
Status Indicator	Active; OFF	This is a system status indication that is currently active, but is not ON or in an alert condition.
Status Indicator	Active; ON	This is a system status indication that is currently active, and is ON.
Status Indicator	Active; ALERT	This is a system status indication that is currently active, and is in an alert condition.

These Status Indicators below are commonly found at the bottom of each page in the Touchscreen. In this situation, all the indicators are active and 'OFF'.

Banner Alerts appear at the bottom of the screen to alert the user of an active alert. It allows the user to acknowledge the alert and depending on how the parameters are set. The Alert Table Editor will determine how to address the alarm/alert.

Notes

When Performance Matters, Count on Carling

Digital Switching Systems | Vessel Monitoring and Control

Marine Switches | Circuit Breakers | AV/IT Lighting

Global Product Support & Service

octoplex.com

carlingtech.com