SUPER B
lithium batteries

Manual

Version
February 2024

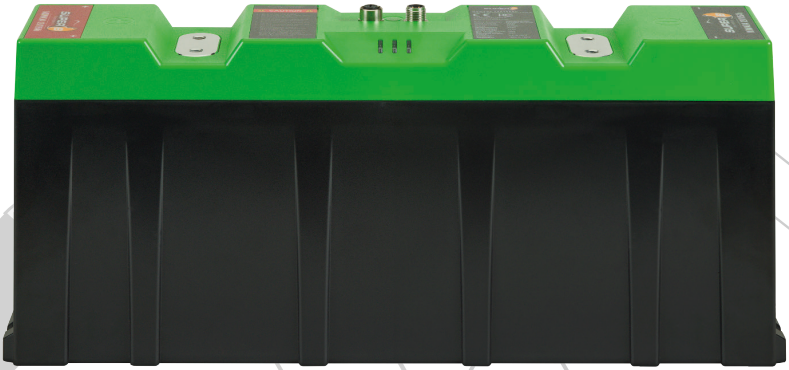

NOMADA 12V105Ah
NOMADA 12V105Ah-LT

User Manual Nomada 12V105Ah(-LT)

Dear customer,

This manual contains all the necessary information to install, use and maintain the Nomada 12V105Ah Li-ion battery. We kindly ask you to read this manual carefully before using the product. In this manual, the Nomada 12V105Ah Li-ion battery will be referred to as: the Li-ion battery. This manual is meant for the installer and the user of the Li-ion battery. Only qualified, certified personnel may install and perform maintenance on the Li-ion battery. Please consult the index at the start of this manual to locate information relevant to you.

During the use of the product, user safety should always be ensured, so installers, users, service personnel and third parties can safely use the Li-ion battery.

Copyright© Super B All rights reserved. Licensed software products are owned by Super B or its subsidiaries or suppliers, and are protected by national copyright laws and international treaty provisions. Super B products are covered by Dutch and foreign patents, issued and pending. Information in this publication supersedes that in all previously published material. Specifications and price change privileges reserved. Super B is a registered trademark of Super B.

For more information please contact:

Super B Lithium Power B.V.
Europalaan 202
7559 SC Hengelo (Ov) The Netherlands
Tel: +31(0)88 00 76 000
E-mail: info@super-b.com
www: www.super-b.com

Table of content

1. Safety guidelines and measures **5**
1.1. General 5
1.2. Disposal 5

2. Introduction **6**
2.1. Product description 6
2.2. Intended use 6
2.3. Glossary of Terminology 7
2.4. Used symbols 7

3. Product specifications **7**
3.1. Product features 7
3.2. Technical specifications 8
3.2.1. Electrical specifications 8
3.2.2. Mechanical specifications 8
3.2.3. Charge & discharge specifications 8
3.2.4. Temperature specifications 9
3.2.5. Compliance specifications 9
3.2.6. General product specifications 9
3.3. Environmental conditions 9
3.4. Scope of delivery 10
3.5. Connections 10
3.5.1. Con 1 & 2 (CANopen; 5-pin “micro” style connector) 11
3.5.2. Con 3 (Optional independent temperature sensor connector) 11
3.5.3. LED Indicators 12
3.6. Peripheral equipment 13
3.6.1. Obligatory 13
3.6.2. Optional Components 13

4. Installation **14**
4.1. General information 14
4.2. Unpacking 14
4.3. Preparing the battery for use 14
4.3.1. Placement of the battery 14
4.4. Connection wires 15
4.4.1. Using the BIB (Battery Interface Box) 16
4.4.2. Using the BCI (Battery Communication Interface) with a normal relay 16
4.5. Disconnecting the Li-ion battery 17

5. Connecting Li-ion batteries in series and parallel **17**
5.1. Connecting Li-ion batteries in series. 17
5.2. Connecting Li-ion batteries in parallel 17

5.3. Connecting Li-ion batteries in series and parallel 18
5.4. CANopen interface 19
5.4.1. CAN Bus network topology 19
5.4.2. Termination Resistors 20
5.4.3. CAN bus power 20
5.5. Independent temperature sensor (optional) 21

6. Battery use 22
6.1. General information 22
6.2. Charging 22
6.2.1. Battery balancing 22
6.2.2. Reading the battery's State of Charge (SoC) 23
6.3. Heating 23
6.4. Battery Monitoring Software 23
6.4.1. Battery History Recording 23

7. Inspection and cleaning 23
7.1. General information 23
7.2. Inspection 23
7.3. Cleaning 24

8. Storage 24

9. Transportation 24

10. Disposal and recycling 25

11. Troubleshooting 25

12. Warranty and liability 25

1. Safety guidelines and measures

1.1. General

- Do not short-circuit the Li-ion battery.
- Treat the Li-ion battery as described in this manual.
- Do not dismantle, crush, puncture, open or shred the Li-ion battery.
- Do not expose Li-ion battery to heat or fire. Avoid exposure to direct sunlight.
- Do not remove the Li-ion battery from its original packaging until required for use.
- In the event of electrolyte leaking, do not allow the liquid to come in contact with the skin or eyes. If contact has been made, wash the affected area with water and seek medical advice.
- Always use a class 2 charger which is specifically provided for use with a Lithium Iron Phosphate battery (LiFePO4)
- Observe the plus (+) and minus (–) marks on the Li-ion battery and equipment and ensure correct use.
- Do not mix batteries of different manufacture, capacity, size or type.
- Keep the Li-ion battery clean.
- Secondary batteries need to be charged before use. Always use a correct charger (see charging manual on our website) and refer to this manual for proper charging instructions.
- Do not leave the Li-ion battery on prolonged charge when not in use.
- After extended periods of storage, it may be necessary to charge and discharge the Li-ion battery several times to obtain maximum performance.
- Retain the original product documentation for future reference.
- Disconnect the Li-ion battery from the equipment when not in use.
- Do not charge the Li-ion battery below 0°C, except for the Nomada 12V105Ah-LT model, which features internal heating.

⚠ **Warning!** Keep the Li-ion battery away from dust and contamination. Place the Li-ion battery in well ventilated areas.

1.2. Disposal

Dispose the Li-ion battery in accordance with local, state and federal laws and regulations.
Do not mix with other (industrial) waste.

2. Introduction

2.1. Product description

The Nomada 12V105Ah is a modular Lithium Iron Phosphate rechargeable battery. The Li-ion battery has a compact and lightweight modular design which means you can easily scale up your energy system. The unique combination of state-of-the art technology and smart software makes this Li-ion battery a robust, safe and easy to use energy storage solution.

The Li-ion battery uses safe Lithium Iron phosphate (LiFePO4) technology. With its integrated battery management system the Li-ion battery is protected from deep discharging, overcharging and overheating.

The Nomada 12V105Ah-LT variant, with an internal heater, allows charging in ambient temperatures below 0°C. This model efficiently heats the Li-ion battery using its own energy. Through a well-designed system setup, the battery can be heated without depleting its charge. This eliminates the need for additional cables or heaters.

⚠ **Warning!** It is required to use a Super B Battery Communication Interface (BCI) in combination with an external disconnect device or a Super B Battery Interface Box (BIB), for safe operation of the Nomada 12V105Ah Li-ion battery

2.2. Intended use

The Nomada 12V105Ah Li-ion battery serves as an energy source of 12V in power systems for recreational vehicles, commercial vehicles, leisure boats, commercial vessels and stationary applications. Potential applications for this Li-ion battery include: off grid power supply, marine power supply, medium for (renewable) energy storage and (traction) battery for vehicles. Using it as a starter battery is not possible. Up to 4 batteries can be connected in series or in parallel to increase the total capacity up to 420Ah. When using more than 4 batteries in series or parallel always consult Super B.

2.3. Glossary of Terminology

BMS	Battery Management System
Charge cycle	A period of use from fully charged, to fully discharged, and fully recharged again.
Endurance Life-cycle	The products maximum lifespan, achieved by following the guidelines presented in this manual.
BCI	Battery Communication Interface
BIB	Battery Interface Box
LiFeP04	Lithium Iron Phosphate
SoC	State of charge
CCCV	Constant Current - Constant Voltage
DoD	Depth of Discharge

Table 1. Glossary of Terminology

2.4. Used symbols

The following icons will be used throughout the manual:

⚠ **Warning!** A warning sign indicates severe damage to the user and/or product may occur when a procedure is not carried out as described.

⚠ **Caution!** A caution sign indicates that problems may occur if a procedure is not carried out as described. It may also serve as a reminder to the user.

3. Product specifications

3.1. Product features

- Modular traction battery
- Lithium Iron Phosphate (LiFePO4): Safe Li-ion technology
- Integrated BMS (Battery Management System),
- BIB or BCI with disconnect device (relay) is required
- PC+ABS (UL94 V-0) flame-retardant battery casing
- Terminals for 2 x M8 bolts
- External fuse needed
- Wired communication interface: CANopen
- Easy CAN bus interconnection
- Battery monitoring and history storage
- Adaptive cell balancing
- Configurable in serial or parallel connection
- Independent temperature sensor for DNV type approved battery
- The optional LT model includes internal heating

3.2. Technical specifications

3.2.1. Electrical specifications

	Nomada 12V105Ah	Nomada 12V105Ah-LT
Nominal capacity	105Ah	105Ah
Energy	1344Wh	1344Wh
Nominal voltage	12.8V	12.8V
Open circuit voltage	13.2V	13.2V
Self discharge	3.9% idle / 24.9% active	3.9% idle / 24.9% active

Table 2. Electrical specifications. Self-discharge: maximum values, incl. cells, BMS and electronics.

3.2.2. Mechanical specifications

	Nomada 12V105Ah	Nomada 12V105Ah-LT
Dimensions (LxWxH)	437 x 90 x 175 mm / 17.2" x 3.5" x 6.9"	437 x 90 x 175 mm / 17.2" x 3.5" x 6.9"
Weight	10 kg / 22 lbs	10 kg / 22 lbs
Case material	PC+ABS (UL94 V-0) flame-retardant battery casing	PC+ABS (UL94 V-0) flame-retardant battery casing
Ingress protection	IP66	IP66
Cell type / chemistry	Prismatic - LiFePO4	Prismatic - LiFePO4

Table 3. Mechanical specifications

3.2.3. Charge & discharge specifications

	Nomada 12V105Ah	Nomada 12V105Ah-LT
Charge method	CCCV	CCCV
Charge voltage	14.3V - 14.6V	14.3V - 14.6V
Max charge current	105A	105A
End of discharge voltage	10V	10V
Max discharge current continous	105A	105A
Max discharge pulse current (30 sec)	315A	315A

Table 4. Charge and discharge specifications

3.2.4. Temperature specifications

	Nomada 12V105Ah	Nomada 12V105Ah-LT
Charge temperature	0°C to 55°C / 32°F to 131°F[1]	-30°C to 55°C / -22°F to 131°F
Discharge temperature	-20°C to 55°C / -4°F to 131°F	-30°C to 55°C / -22°F to 131°F
Storage temperature short term (<1 month)	-20°C to 45°C / -4°F to 113°F	-20°C to 45°C / -4°F to 113°F
Storage temperature long term (>1 month)	0°C to 35°C / 32°F to 95°F[2]	0°C to 35°C / 32°F to 95°F[2]
Relative humidity	10-90%	10-90%

Table 5. Temperature specifications

[1]Do not charge the Li-ion battery below 0°C / 32°F
[2]Long term exposure to temperatures >35°C / 95°F might affect battery capacity and cycle life.

3.2.5. Compliance specifications

	Nomada 12V105Ah	Nomada 12V105Ah-LT
Certifications	CE, UKCA, FCC, UN 38.3, DNV, UL 1642 (Cells), UN ECE R10.06, ES-TRIN	CE, UKCA, FCC, UN 38.3, UL 1642 (Cells), UN ECE R10.06,
Shipping classification	UN 3480	UN 3480

Table 6. Compliance specifications

3.2.6. General product specifications

	Nomada 12V105Ah	Nomada 12V105Ah-LT
Battery designation	IFpP/36/130/195/[4S]M/-20+55/90	IFpP/36/130/195/[4S]M/-20+55/90
Cycle life	>3500 (1C charge/discharge, DoD 100%)[3]	>3500 (1C charge/discharge, DoD 100%)[3]

Table 7. General product specifications

[3]The cycle life value given above is an indication at 23°C. The Li-ion battery cycle life depends strongly on temperature and the applied charging and discharging loads.

3.3. Environmental conditions

⚠ **Warning!** The Li-ion battery may only be used in conditions specified in this manual. Exposing the Li-ion battery to conditions outside the specified boundaries may lead to serious damage to the product and/or the user.

Use the Li-ion battery in a dry, clean, dust free, well ventilated area. Do not expose the Li-ion battery to fire, solvents or excessive heat.

3.4. Scope of delivery

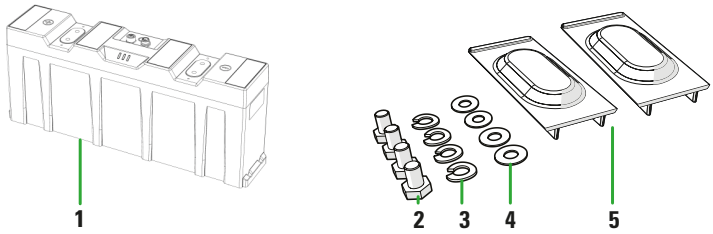

Figure 1. Scope of delivery.

1. (1x) Nomada 12V105Ah lithium battery
2. (4x) M8 Bolt
3. (4x) M8 Spring washer
4. (4x) M8 Plain washer
5. (2x) Terminal protection cap

3.5. Connections

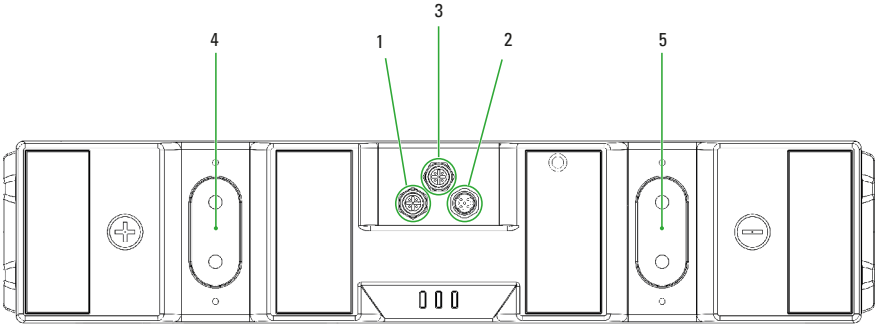

Figure 2. Connections

1. Con 1 (CANopen; 5-pin “micro” style connector female)
2. Con 2 (CANopen; 5-pin “micro” style connector male)
3. Con 3 (Independent temperature sensor output, DNV type approved model only)

(5-pin “micro” style connector female)[1]

4. Terminal + (2x M8)
5. Terminal - (2x M8)

[1]Note: Con 3 is only available for the DNV type approved model, as standard the battery is delivered without this optional connector, for further details and detailed information on how to use this connector please contact Super B

3.5.1. Con 1 & 2 (CANopen; 5-pin “micro” style connector)

PIN #	Signal	Description
1	CAN_SHLD	Optional CAN Shield
2	CAN_V+	Optional CAN external positive supply (dedicated for supply of transceiver and optocouplers. if galvanic isolation of the bus node applies)
3	CAN_GND	Ground / 0V
4	CAN_H	CAN_H bus line (dominant high)
5	CAN_L	CAN_L bus line (dominant low)

Table 8. Con 1 & 2 (CANopen; 5-pin “micro” style connector)

3.5.2. Con 3 (Optional independent temperature sensor connector)

PIN #	Signal	Description
1	SHIELD	Optional shielding (connected to CAN shield)
2	VPLUS	Power supply for independent temperature sensor (connected to CAN V+) voltage range: 12-24V (max. 30V)
3	VMIN	GND / 0V (connected to CAN GND)
4	NC	Do not connect
5	SWITCH OUTPUT	Open drain output for temperature sensor (active low signal, fused 150mA, self resetting)

Table 9. Con 3 (Sensor output; 5-pin “micro” style connector)

Con 3 is provided with a protective M12 cap (see figure 3). When CAN is not used it must be mounted to ensure the IP rating of the Li-ion battery.

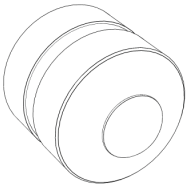

Figure 3. Protective M12 cap

3.5.3. LED Indicators

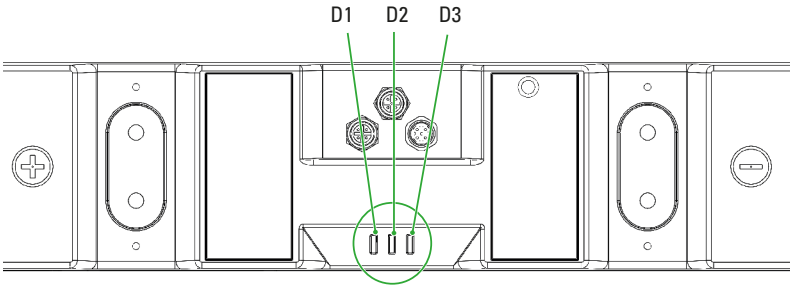

Figure 4. LED Indicators

	D1 (Green)	D2 (Yellow)	D3 (Red)	Mode
1	Off	Off	Off	Empty / Deep discharge
2	Off	Off	On	Alarm mode
3	On	Off	Off	Operational mode
4	Flashing	Off	Off	Operational mode (Idle)[1]
5	Off	On	Off	Warning mode

Table 10. LED Mode

[1]When the Li-ion battery is in operational mode and the battery is not being charged or discharged, the Green LED indicator flashes every 3 seconds.

3.6. Peripheral equipment

3.6.1. Obligatory

In order for the Li-ion battery to be used safely, a BIB or BCI in combination with an external disconnect device must be installed. Not installing a BIB or BCI with an external disconnect device will lead to serious damage to the Li-ion battery and can pose high safety risks for users and the environment. When a BIB or BCI with an external disconnect device is not installed the warranty of the Li-ion battery will be void.

3.6.2. Optional Components

The Li-ion battery can be used in combination with a number of (Super B) products:

Article name	EAN code
CAN Cable 0.6m Male to Female	8718531360716
CAN Cable 1m Male to Female	8718531360723
CAN Cable 2m Male to Female	8718531360730
CAN Cable 5m Male to Female	8718531360747
CAN Cable 10m Male to Female	8718531360754
BIB LV12V350A V2	8718531361843
BIB LV24V350A V2	8718531361850
BIB LV48V350A V2	8718531361867
BIB LV12V600A V2	8718531361874
BIB LV24V600A V2	8718531361881
BIB LV48V600A V2	8718531361898
Be in Charge Monitoring Kit	8718531362086
BCI	8718531360884
Touch Display	8718531362178
Touch Display + Cable 5m	8718531361447
CAN Terminator Male Low Profile	8718531361997
CAN Terminator Female Low Profile	8718531362000
CAN Cable 0.25m angled male to angled female	8718531362147
CAN Cable 1m angled male to angled female	8718531362154
CAN Cable 2.5m angled male to angled female	8718531362161
Cable 0.2m Y-split angled male to straight male-female	8718531361942
Battery Bracket for 1 Nomada	8718531362123

Battery Bracket for 4 Nomada's	8718531362130
Nomada battery connection strip series	8718531361959
Nomada battery connection strip parallel	8718531361966

Table 11. Optional components that can be used in combination with the Li-ion battery

4. Installation

4.1. General information

⚠ **Warning!** Never install or use a damaged Li-ion battery.
⚠ **Warning!** Always use a proper fuse which fits the system needs.
⚠ **Warning!** Do not reverse connect the Li-ion battery (polarity).

When connecting several batteries in series or parallel, always use batteries of the same brand, type, age, capacity and state of charge.

4.2. Unpacking

Check the Li-ion battery for damage after unpacking. If the Li-ion battery is damaged, contact your reseller or Super B. Do not install or use the Li-ion battery if it is damaged!

4.3. Preparing the battery for use

⚠ **Caution!** Do not operate the Li-ion battery beyond published maximum specifications.
⚠ **Caution!** Charging at deep discharge conditions can lead to venting, excessive heat or thermal runaway of the cells.
⚠ **Caution!** This Li-ion battery stores fault conditions internally, like excessive charge current or deep discharge situations. Super B uses this information in the warranty process.
⚠ **Warning!** Do not overcharge the Li-ion battery.

4.3.1. Placement of the battery

Before it is used, the Li-ion battery must be positioned in such a way that it will not move around in its compartment during use. The Li-on battery may be placed on its long side, but not upside down or on its short side. If necessary, the Li-ion battery may be fixed in place by means of Super B mounting brackets. The brackets can be screwed in place by means of bolts or screws.

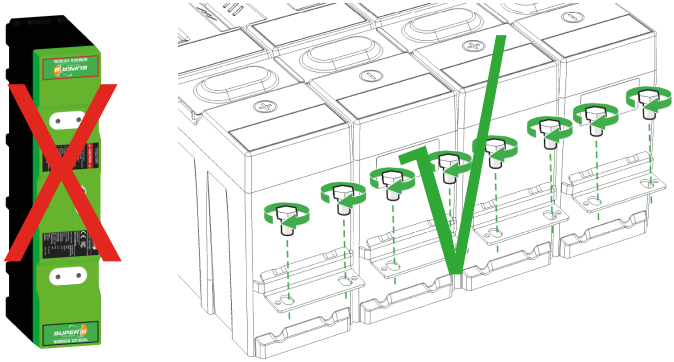

NOT OK OK

Figure 5. Placement of the battery

4.4. Connection wires

Use appropriate wire for the connection wires to prevent overheating and unnecessary losses. Use appropriate fuses matching the wires and load. Super B suggests to use 95mm^2 connection wires. Connection wires with smaller diameters can cause overheating or unnecessary losses.

4.4.1. Using the BIB (Battery Interface Box)

⚠ **Warning!** Do not connect a load or charger directly on the Li-ion battery, always connect these devices at the load side of the BIB.

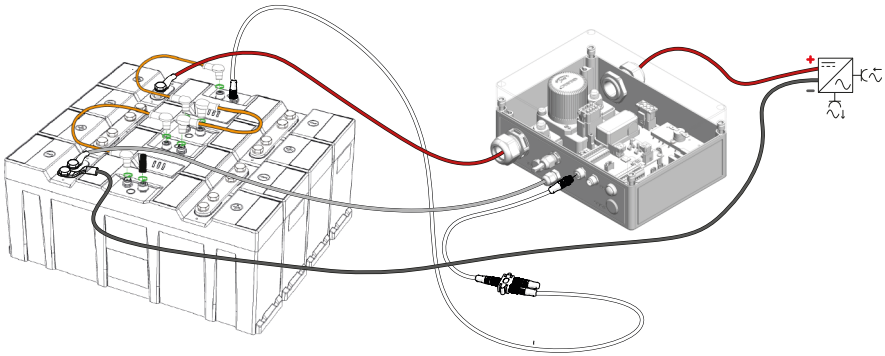

Figure 6. Connecting a Li-ion battery to the BIB

Consult with Super B for the BIB installation instructions.

4.4.2. Using the BCI (Battery Communication Interface) with a normal relay

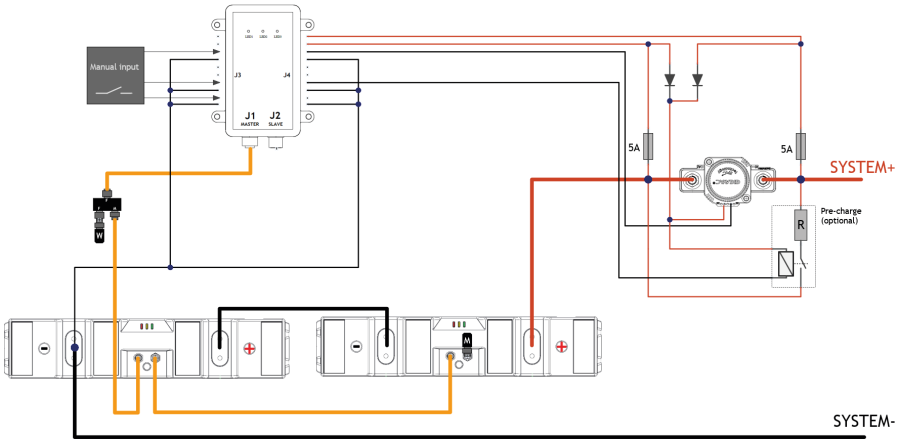

Figure 7. Connecting a Li-ion battery to the BCI

Consult with Super B for the BCI installation instructions.

4.5. Disconnecting the Li-ion battery

1. Turn off any device or charger the Li-ion battery is connected to.
2. Disconnect the negative wire from the - terminal of the Li-ion battery.
3. Disconnect the positive wire from the + terminal of the Li-ion battery.

5. Connecting Li-ion batteries in series and parallel

5.1. Connecting Li-ion batteries in series.

⚠ **Caution!** When connecting multiple batteries in series or parallel make sure that the SoC of all batteries is 100% to avoid unbalance in the battery bank.

⚠ **Caution!** Before connecting 4 or more batteries in series, always consult Super B

⚠ **Caution!** Depending on the installation a precharge circuit might be needed. For further information consult Super B or your dealer.

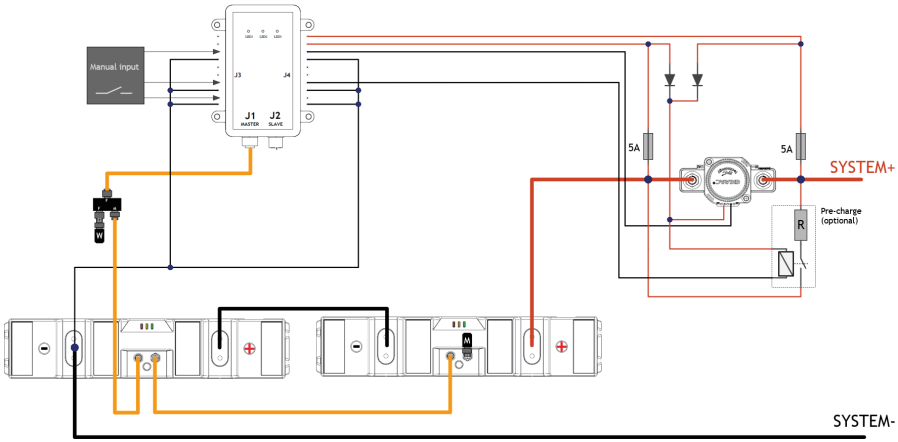

Figure 8. Batteries connected in series with external disconnect device and BCI.

5.2. Connecting Li-ion batteries in parallel

⚠ **Caution!** Before connecting 2 or more Li-ion batteries in parallel, the Li-ion batteries must be charged to 100% SoC.

⚠ **Caution!** For more than 4 Li-ion batteries in parallel connection consult Super B or your dealer.

⚠ **Caution!** Depending on the installation a precharge circuit might be needed. For further information consult Super B or your dealer.

⚠ **Caution!** Make sure that the disconnect device (relay) used, is suitable for the maximum continous (dis)charge current of the system.

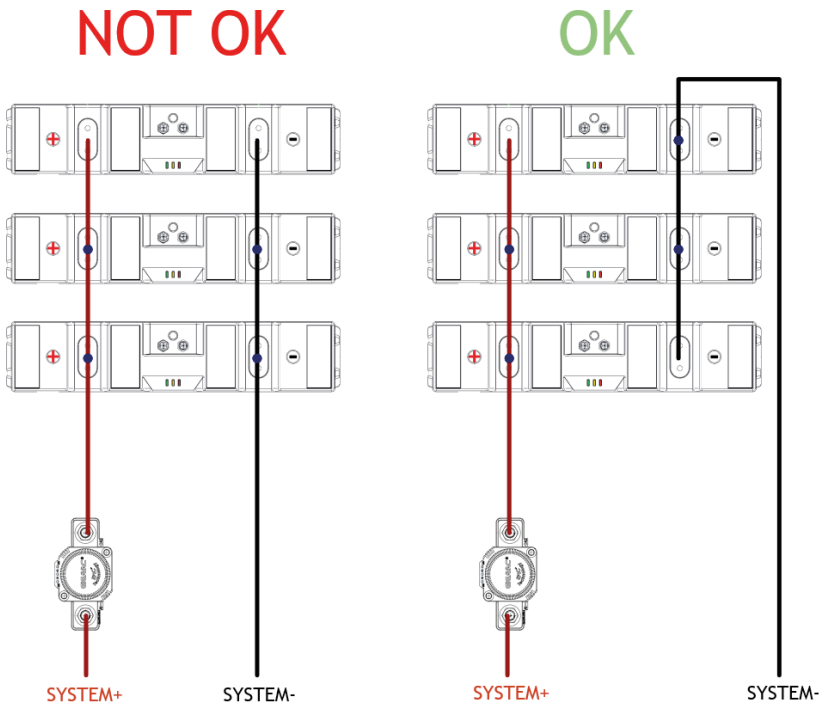

Figure 9. Three Li-ion batteries in parallel with external disconnect device

OK: Equally divided battery current.
All batteries contribute equally to the current into the load.

NOT OK: Current not equally divided.
Batteries closest to load will have the highest contribution to the current into the load, whereas batteries further away from load will have lesser current contribution.
Wear and tear will be higher on the Li-ion battery close to the load.

5.3. Connecting Li-ion batteries in series and parallel

⚠ **Caution!** Before connecting 4 or more Li-ion batteries in series and parallel, the Li-ion batteries must be charged to 100% SoC.
⚠ **Caution!** For more than 4 Li-ion batteries in series and parallel connection consult Super B or your dealer.

⚠ **Caution!** Depending on the installation a precharge circuit might be needed. For further information consult Super B or your dealer.

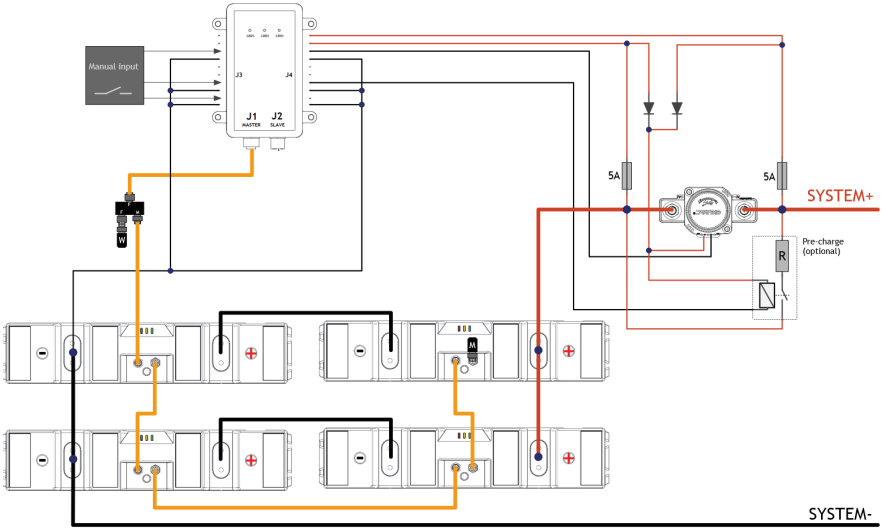

Figure 10. Four Li-ion batteries in a series - parallel connection with a BCI and external disconnect device.

5.4. CANopen interface

The CANopen interface of the Li-ion battery must be used for communication with the BCI/ BIB and can be used for monitoring purposes.

The Li-ion battery can be monitored using the Battery Monitor software and the touch screen display.

To use the Battery Monitoring Software, the CAN bus of the Li-ion battery needs to be connected by means of CAN-to-USB interface to the computer on which the monitoring software and the USB drivers are installed.

More information about the CANopen bus can be found at the CiA website: www.can-cia.org.

5.4.1. CAN Bus network topology

The CAN Bus must be used in a bus network topology. Do not use a ring- or a star topology. The maximum CAN bus length is limited. The Li-ion battery has a fixed bitrate of 250kbps.

In table 11 is an overview of these restrictions.

Bit rate	Bus length (L)	Max. stub length (S)	Accumulated stub length
250 kbps	250 m	11 m	55 m

Table 12. CAN bus restrictions

5.4.2. Termination Resistors

The CAN bus requires termination at the two ends of the bus. The USB-to-CAN interface may be connected anywhere to the CAN bus.

Use these resistors at the end nodes to prevent reflections on the line. The value of this resistor should be ±120 ohms.

Please note that the terminator can be connected directly to the second connector on the Li-ion battery by using the available Super B terminators.

5.4.3. CAN bus power

Due to the galvanic isolation between the BMS and the Li-ion battery's CAN interface an external power supply is needed on the CAN bus.

The CAN bus can be powered through the CAN power cable (see figure 9).
This situation may occur when a USB-to CAN interface is directly connected to the Li-ion battery. When using the SB BCI with one Li-ion battery, the CAN power cable is required.

When using the SB BCI with 2 to 16 Li-ion batteries, the CAN power cable isn't required. The power is provided by the BCI.

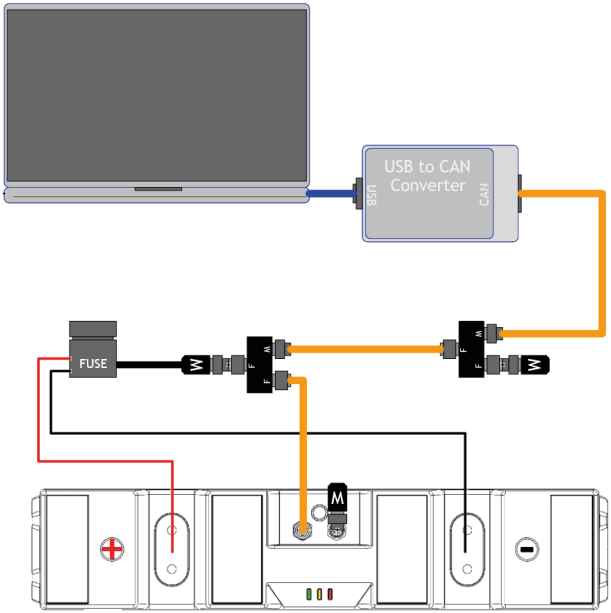

Figure 11. CAN bus power

5.5. Independent temperature sensor (optional)

For certain applications or systems which require our DNV Type Approved model, a 3rd connector is designed, to allow connection to an independent temperature sensor. The connector is only available on the Nomada Li-ion battery with DNV Type Approval, and a standard Li-ion battery does is not equipped with this 3rd connector. This sensor works independently from the BMS and is not electrically connected to the BMS, it is used as a redundant temperature guard.

It measures the battery temperature and switches at a fixed level, to send out a signal informing the user (or Energy Management System), that the battery has reached a temperature level that is too high.

The internal circuit can be powered from the CAN bus power, or by using the input connections within the Con 3 connector. The temperature sensor output is a fused open-drain output, pulling the signal line low when the temperature sensor has been activated. The sensor trip level is ~75°C.

In large installations where more than one independent battery sensor needs to be observed, the signal from all the Li-ion batteries can be connected in parallel, using a special y-split cable (see paragraph 3.6.2). Please contact Super B for more information about this connection, DNV application information, and supplied accessories.

6. Battery use

6.1. General information

⚠ **Warning!** It is required to use a Super B Battery Communication Interface (BCI) in combination with an external disconnect device or a Super B Battery Interface Box (BIB), for safe operation of the Li-ion battery.

⚠ **Warning!** In case of an undervoltage shutdown the charging current must be very low until a safe voltage is achieved.

⚠ **Warning!** Follow the safety guidelines and measures of chapter 1.

⚠ **Caution!** Charge the Li-ion battery before use.

⚠ **Caution!** Do not cover the + and - sign as they contain a integrated pressure relief mechanism.

6.2. Charging

⚠ **Warning!** Never charge the Li-ion battery with a charging current larger than the maximum charge current specified in chapter 3.2.3

⚠ **Warning!** Stop charging when the Li-ion battery switches to alarm mode (the external disconnect device will switch off).

⚠ **Caution!** When charging via an externally driven alternator, it must be ensured that an optimal charging curve charges the Li-ion battery (see for instructions the charging manual which can be found on the Super B website). For this, the use of a charge converter (DC/DC booster) is indispensable.

⚠ **Caution!** To charge the Li-ion battery, use a charger which follow Super B's charging profile (see charging manual which can be found on the Super B website).

1. Connect the charger to the Li-ion battery as described in paragraph 4.
2. Charge the Li-ion battery in case of an under-voltage shutdown or if the state of charge drops below 20% to preserve the lifespan of the Li-ion battery.

6.2.1. Battery balancing

During the battery lifespan, the cells within the Li-ion battery may be unbalanced due to high discharge currents and short float charge periods. This may result in a loss of capacity and unbalanced cells. The cells can be manually balanced by applying a constant voltage of 14.4 V and a current between 500mA and 800mA to the Li-ion battery

6.2.2. Reading the battery's State of Charge (SoC)

The Li-ion battery's State of Charge can only be read by CAN communication.

6.3. Heating

This paragraph pertains solely to the Nomada 12V105Ah-LT model equipped with internal heating. The Li-ion battery's heaters are controlled via the CAN communication interface. Utilize the Battery Communication Interface (BCI) to configure and activate the heating elements. Refer to the BCI manual for further information. If communication is interrupted while the heaters are activated, they will automatically switch off to prevent overheating. Additionally, a secondary internal failsafe mechanism is in place.

6.4. Battery Monitoring Software

Super B battery monitoring software offers the possibility to monitor the parameters of the Li-ion battery, such as cell voltage or temperature. It also enables one to download a complete recording of the Li-ion battery's properties over time.
The battery monitoring software and hardware are not included with the Li-ion battery. An overview of these products is given in paragraph 3.6.2.

6.4.1. Battery History Recording

The battery history can be downloaded with the battery monitor software. This recording can only be accessed by a reseller or Super B for evaluation.

7. Inspection and cleaning

7.1. General information

⚠ **Warning!** Never attempt to open or dismantle the Li-ion battery! The inside of the Li-ion battery does not contain serviceable parts.

1. Disconnect the Li-ion battery from all loads and charging devices before performing cleaning and maintenance activities (see paragraph 4.5).
2. Place the enclosed protective caps over the terminals before cleaning and maintenance activities to avoid making a short circuit.

7.2. Inspection

1. Inspect for loose and/or damaged wiring and contacts, cracks, deformations, leakage or damage of any other kind. If damage to the Li-ion battery is found, it must be replaced. Do not attempt to charge or use a damaged Li-ion battery. Do not touch the liquid from a ruptured Li-ion battery.
2. Observe and note the run time that a new and fully-charged Li-ion battery provides for powering your product. Use this new run time as a basis to compare run times for older batteries. The run time of the

Li-ion battery will vary depending on the products' configuration and its application.

3. Routinely check the Li-ion battery's SOC. When not in use or stored, the battery slowly loses charge: cell self-discharge (<3% per month) plus BMS consumption (see Table 2).
4. Consider replacing the Li-ion battery if you note either one of the following conditions:
   - The Li-ion battery run time drops below about 80% of the original run time.
   - The Li-ion battery charge time increases significantly.

7.3. Cleaning

If necessary, clean the Li-ion battery with a soft, dry cloth. Never use liquids, solvents, or abrasives to clean the Li-ion battery.

8. Storage

Follow the storage instructions below to optimize the lifespan of the Li-ion battery. If these instructions are not followed and the Li-ion battery has no charge remaining when it is checked, consider it to be damaged. Do not attempt to charge or use it. Replace it with a new Li-ion battery.
See paragraph 3.2.4 for storage temperature conditions.

1. Charge or discharge the Li-ion battery to 80% of its capacity before storage.
2. Disconnect the Li-ion battery from all loads and, if present, the charging device.
3. Place the terminal covers over the terminals during storage.
4. Charge the Li-ion battery to 80% of its capacity every year.

9. Transportation

Always check all applicable local, national, and international regulations before transporting a Lithium Iron Phosphate battery.

Transporting an end-of-life, damaged, or recalled Li-ion battery may, in certain cases, be specifically limited or prohibited.
The transport of the Li-ion battery falls under hazard class UN3480, class 9. For transport over water, air and land, the Li-ion battery falls within packaging group PI965 Section II.

10. Disposal and recycling

Always discharge the Li-ion battery before disposal. Use electrical tape or other approved covering over the terminals to prevent short circuits.
Battery recycling is encouraged. Dispose of the Li-ion battery in accordance with local, state and federal laws and regulations.

11. Troubleshooting

Problem	Possible reason	Solution
The capacity of the Li-ion battery has decreased	The cells within the batteries are not properly balanced or the Li-ion battery is worn out.	Perform one full charge cycle to balance the cells (see chapter 5 for balancing).
The Li-ion battery cannot be charged / discharged	The Li-ion battery has been deeply discharged. The BMS is now in “fault condition”.	Disconnect all loads and charge the Li-ion battery. Then press the reset button on the BIB / BCI for at least 10-15 seconds to resolve the “fault condition”.
	The Li-ion battery has been overcharged. The BMS is now in “fault condition”.	Stop charging the Li-ion battery and press the reset button on the BIB / BCI for at least 10-15 seconds to resolve the “fault condition”.
	The Li-ion battery has overheated. The BMS is now in “fault condition”.	Stop charging the Li-ion battery and disconnect all loads and wait for the Li-ion battery to cool down. Then press the reset button on the BIB / BCI for at least 10-15 seconds to resolve the “fault condition”.

Table 13. Troubleshooting

12. Warranty and liability

No rights can be derived from this document. Any installation or use contrary to these instructions may void the warranty granted to you. Please refer to the sales agreement for warranty and other provisions applicable to your purchase. If the product is defective, please contact the dealer, reseller or retailer that you purchased the product from. Super B’s liability for any of its products is limited to the corresponding provisions under mandatory applicable law.

For more information please contact:

Super B Lithium Power B.V.
Europalaan 202
7559 SC Hengelo (Ov)
The Netherlands

Tel: +31 (0)88 0076 000
E-mail: info@super-b.com
www: www.super-b.com

Manual February 2024