Download User Manual at:
https://tbs-electronics.com/product/remote-battery-switch/

Version 1.3

# QUICK START GUIDE

## CONNECTING A TBS RBS TO A SUPER B BCI

TBS Remote battery switch

12V: DCM RBS 12V-500A
24V: DCM RBS 24V-500A
48V: DCM RBS 48V-350A

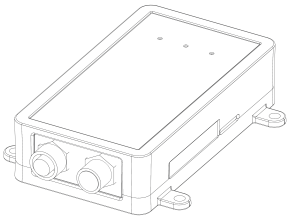

BCI

## TBS RBS CONNECTIONS

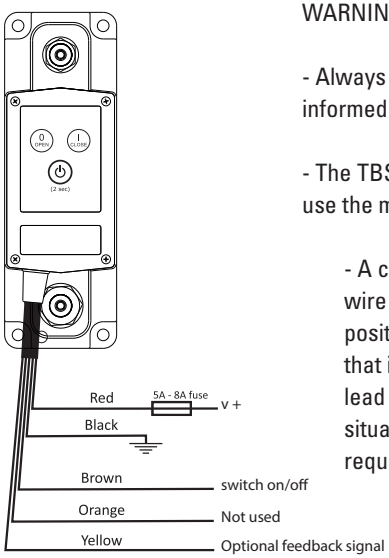


WARNING

- Always consult the latest manual on the TBS website to be informed about pre-cautions and specifications.

- The TBS relay is delivered default bi-stable mode. Please use the manual to put the relay in mono-stable mode.

- A complete power loss of the system (eg. Fuse blow or wire cut) might cause the TBS relay to stay in the last position since in basics it is a bi-stable relay. This means that it might stay on. When replacing the fuse it might lead to the system turning on again leading to an unsafe situation. Please verify if this behavior fits the safety requirements in your system or contact Super B.

## CONNECTING TBS RBS TO A BCI

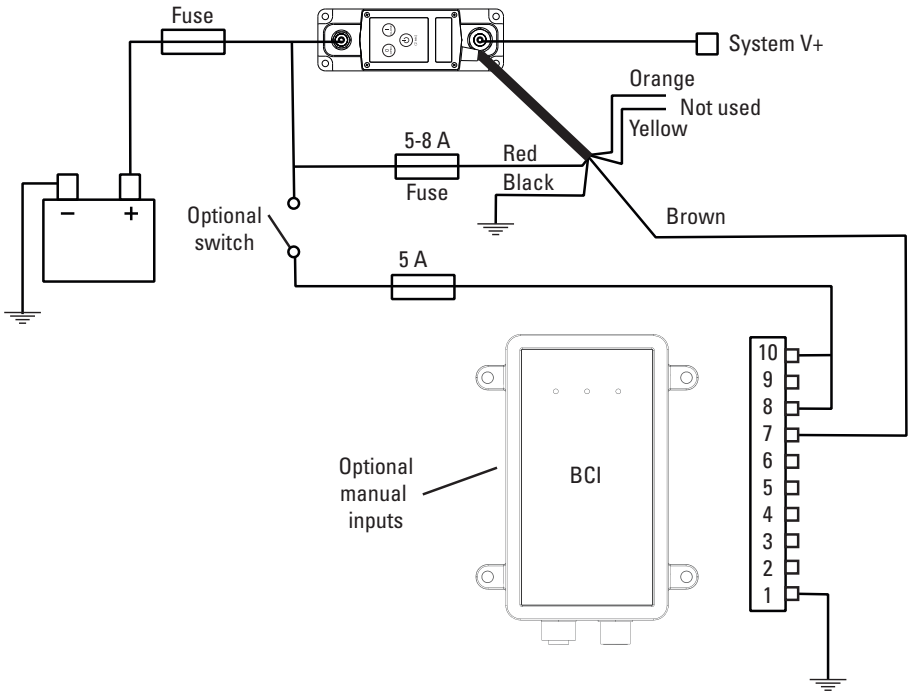


- Consult Super-B BCI manual for further precautions/specifications and connections.

- In some cases with high system capacity a pre-charge resistor is needed. Please contact Super B when in doubt.

- Using the BCI without pre-charge is only possible when using software version V2.34 and higher. (Enable the “use external power” option to work without pre-charge).

- Always configure the TBS RBS to monostable mode. Please find instructions in the manual. “Change control mode” --> mode 4

- Avoid using the manual control buttons, using manual control to override the batteries relay control can damage the battery (overcharge or deeply discharging)

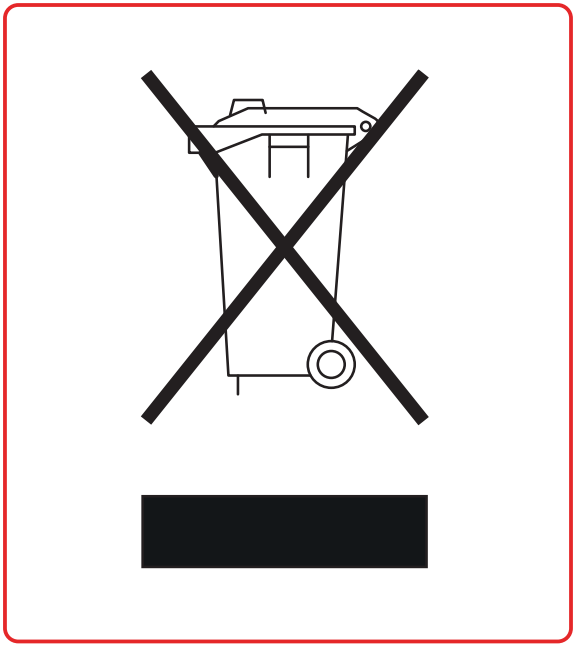

Version 1.3

SUPER B lithium batteries

Europalaan 202
7559 SC Hengelo (Ov.)
The Netherlands
T+31(0)88 00 76 000

Contact us:
info@super-b.com

Visit our website
www.super-b.com